VBZ-3

Automatic Stud Feeder

94-66-1..B

Operating Manual

2022

After-sales service for Germany:

HBS Bolzenschweiss-Systeme GmbH & Co. KG
Felix-Wankel-Strasse 18
85221 DACHAU
GERMANY

Phone	**+49 8131 511-0**
Fax	**+49 8131 511-100**
E-mail	**international@hbs-info.com**
Web	**www.hbs-info.com**

VBZ-3 Operating Manual Issue 2022-01 Order No. US-BA 94-66-1..B

Translation of the Original Operating Manual

Please keep the manual in a safe place for future reference.

Transmission and duplication of this document, dissemination and notification of the contents are not permitted unless expressly approved.

All rights, errors and technical amendments reserved.

© HBS Bolzenschweiss-Systeme GmbH & Co. KG

Dear Customer,

Many thanks for buying a stud welding machine from HBS Bolzenschweiss-Systeme.

We at HBS wish you success at all times when working with this stud welding machine.

The high level of quality of our products is guaranteed by ongoing further development in the design, equipment and accessories. This may result in differences between the present operating manual and your product. No claims can therefore be derived from the data, illustrations and descriptions.

We have compiled the data and information in this reference work with the greatest care, and have made every effort to ensure that the information contained in this manual was correct and up-to-date at the time of delivery. We can nevertheless give no guarantee for an absolutely error-free document.

Should you discover any errors or unclear points when reading this operating manual, please do not hesitate to contact us.

We would also be grateful for any feedback should you have any suggestions or complaints to make about our product.

HBS Bolzenschweiss-Systeme GmbH & Co. KG

Felix-Wankel-Strasse 18

85221 Dachau

GERMANY

All rights reserved – Reprinting, in whole or in part, only with the approval of the manufacturer

Table of Contents

1 Important Safety Precautions 6

2 Symbols and Terms Used 10

3 Scope of Supply 13

4 Accessories 13

5 Technical Data 14

6 Intended Use 15

7 Warranty 16

8 Configuration and Function 17

9 Welding Process 18

10 Preparing the Fully Automatic Stud Feeder (VBZ) 19

10.1 Adjusting the VBZ 19
10.2 Changing-over the VBZ 21
10.3 Inspection Tasks Prior to Commissioning 23
10.4 Connecting the VBZ to the Mains Supply 25
10.5 Connecting the VBZ to Compressed Air 26
10.6 Filling Studs 27
10.7 Setting the Overtravel Time and Vibration Intensity 28

11 Welding 29

12 Troubleshooting 30

13 Maintenance and Care 32

13.1 Cleaning 32
13.2 Inspection and Tests 33

©HBS Bolzenschweiss-Systeme GmbH & Co. KG
All rights reserved – Reprinting, in whole or in part, only with the approval of the manufacturer

14 Storage 34

15 Disposal 34

Service & Support 35

Index 36

All rights reserved – Reprinting, in whole or in part, only with the approval of the manufacturer

1 Important Safety Precautions

The target group for this manual are qualified personnel who in view of their technical training, know-how and experience and knowledge of applicable regulations are able to assess the work assigned to them and recognise potential hazards.

Danger from incorrect use

- Use the stud welding machine only for the purpose described in this manual.

Otherwise you may endanger yourself or damage the stud welding machine.

You endanger yourself and others if you operate the stud welding machine incorrectly or fail to observe the safety precautions and warnings. This can lead to serious injury or extensive material damage.

Danger for unauthorised operating personnel

- Work with the stud welding machine only when
  - You are appropriately trained, instructed and authorised to do so, and
  - You have read and completely understood this operating manual.
- Never work with the stud welding machine when you are under the influence of
  - Alcohol,
  - Drugs or
  - Medication.

Danger from unauthorised modifications

- Never modify the stud welding machine or parts thereof without obtaining a clearance certificate from the manufacturer.

You will otherwise endanger yourself. This can lead to serious injury or extensive material damage.

©HBS Bolzenschweiss-Systeme GmbH & Co. KG

All rights reserved – Reprinting, in whole or in part, only with the approval of the manufacturer

Life-threatening danger for wearers of active implanted cardiac devices

Danger for workers at particular risk within the meaning of the EMF directive

Persons at particular risk within the meaning of the EMF directive are:

– Workers with active implanted medical devices
– Workers with passive implanted medical devices that contain metal
– Workers with medical devices worn on the body
– Pregnant workers.

◆ Never operate the stud welding machine if you are among the group of workers at particular risk within the meaning of the EMF directive.
◆ In this case, never remain in the vicinity of the stud welding machine during welding.
◆ Never operate the stud welding machine if persons are located nearby who are among the group of workers at particular risk within the meaning of the EMF directive.

Strong electromagnetic fields are produced in the vicinity of the stud welding machine during welding. These fields can adversely affect the function of medical devices as well as the course of a pregnancy.

Danger from fumes and airborne particulates

◆ Switch on the welding fume extractor at the place of work.
◆ Ensure that the room is well ventilated.
◆ Never weld in rooms with a ceiling height of less than 3 m.
◆ Observe furthermore your working instructions and the accident prevention regulations.

This will help to avoid health damage due to fumes and airborne particulates.

All rights reserved – Reprinting, in whole or in part, only with the approval of the manufacturer

Danger from glowing metal spatter (fire hazard)

Glowing hot weld spatter and liquid splashes, flashes of light and a loud bang > 90 dB (A) must be anticipated during stud welding.

- Inform colleagues working in the immediate vicinity accordingly before starting work.
- Ensure that an approved fire extinguisher is available at the workplace.
- Do not weld when wearing working clothes soiled with flammable substances such as oil, grease, petroleum, etc.
- Wear your proper protective equipment, such as:
  - Protective gloves in accordance with the relevant standard,
  - Non-flammable clothing,
  - A protective apron over your clothing,
  - Full-ear hearing protection in accordance with the relevant standard,
  - A safety helmet when welding above your head,
  - Safety shoes,
  - Safety goggles with sight glass of protection level 2 in compliance with the applicable standards and do not look directly into the electric arc.
- Remove all flammable materials and liquids from the vicinity of the work area before starting welding.
- Weld at a safe distance from flammable materials or liquids. Select a safety distance large enough to ensure that no danger can arise from weld spatter.

Protection of the stud welding unit

- Protect the stud welding machine against the ingress of foreign matter and liquids caused by cutting or grinding work in the vicinity of your work area.

This will help to prolong the service life of your stud welding machine.

©HBS Bolzenschweiss-Systeme GmbH & Co. KG

All rights reserved – Reprinting, in whole or in part, only with the approval of the manufacturer

Safety notices in accordance with EMF directive 2013/35/EU

Currents flowing through electrical conductors during stud welding cause electric and magnetic fields that can occur, in particular, near the hand-held welding guns, the welding arrangement (e.g., welding cables) and the welding power sources.

Due to the high currents, high EMF exposures may occur.

Danger for workers at particular risk within the meaning of the EMF directive

Persons at particular risk within the meaning of the EMF directive are:

- Workers with active implanted medical devices
- Workers with passive implanted medical devices that contain metal
- Workers with medical devices worn on the body
- Pregnant workers.

Strong electromagnetic fields are produced in the vicinity of the stud welding machine during welding.

To reduce the danger posed by electromagnetic fields, we recommend, among other things, the following rules of conduct:

◆ Lay all cables as close together as possible.

For proper bundling and safeguarding of the cables, HBS offers protective tubes in various sizes.

◆ Do not position yourself between the welding cables.

◆ Only lay the cables to one side and position them as far as possible from the operating personnel.

◆ Do not loop the cables over your body, especially not at head level.

◆ Completely unwind the welding cables.

◆ Use the shortest possible welding cables.

◆ Place portable welding power sources as far away as possible while welding.

◆ If possible, do not operate welding power sources in the immediate vicinity of other persons, do not sit directly next to the welding power source while working and do not lean against it.

◆ In addition to these safety notices, also observe your work instructions and accident prevention regulations.

All rights reserved – Reprinting, in whole or in part, only with the approval of the manufacturer

2 Symbols and Terms Used

The symbols used in this operating manual have the following meanings:

Danger

Warns you of hazards that can lead to **injury of persons** or to **considerable material damage.**

Caution

Problems in operating **may occur** if this information **is not observed.**

No access for people with active implanted cardiac devices

No access for persons with implants made of metal

No access for pregnant women

Danger

Warns you of **electrical** hazards

Danger

Warns you of **electromagnetic fields** that can be generated during welding

These symbols prompt you to wear **personal protective equipment when working with the stud welding unit**.

This symbol prompts you to wear **ear protection**. **A loud bang > 90 dB (A) can occur during the welding process.**

©HBS Bolzenschweiss-Systeme GmbH & Co. KG

All rights reserved – Reprinting, in whole or in part, only with the approval of the manufacturer

☞ **Tip**

Cross-reference to **useful information** on the use of the stud welding machine

Cross-references in this operating manual are marked with this symbol or ***are printed in italics***

Fire hazard

Have a suitable fire extinguisher for the working area ready before starting work.

◆ **Work instruction**

– **List**

©HBS Bolzenschweiss-Systeme GmbH & Co. KG

All rights reserved – Reprinting, in whole or in part, only with the approval of the manufacturer

Glossary

Automatic welding head:	Device for welding of welding elements
Capacitor:	Component for storage of electrical energy.
Electric arc:	Autonomous gas discharge between two electrodes when the current is high enough. A whitish light is emitted in the process. The electric arc allows very high temperatures to be generated.
Rectifier:	Electrical component that converts alternating voltage into direct voltage
Stud feeder:	Device for automatic feeding of welding elements
Stud welding gun:	Device for welding of welding elements
Stud welding system:	Stud welding unit including stud welding gun or welding head
Stud welding unit:	Device for provision of the electrical energy for stud welding
Thyristor:	Electronic component for contact-free switching of high currents; switching takes place via the control input
Welding element:	Component such as stud or pin that is welded to the workpiece
Welding parameters:	Mechanical and electrical settings at the stud welding gun or welding head and at the stud welding unit (e.g. spring force, charging voltage)
Workpiece:	Components such as sheet metal or tubes to which the welding elements are to be fastened

©HBS Bolzenschweiss-Systeme GmbH & Co. KG

All rights reserved – Reprinting, in whole or in part, only with the approval of the manufacturer

3 Scope of Supply

The **basic configuration** of your automatic stud feeder contains the following parts:

No. of pieces	Part	Type	Order No.
1	Automatic stud feeder	VBZ-3	94-66-1..B
1	Operating manual	VBZ-3	US-BA 94-66-1..B

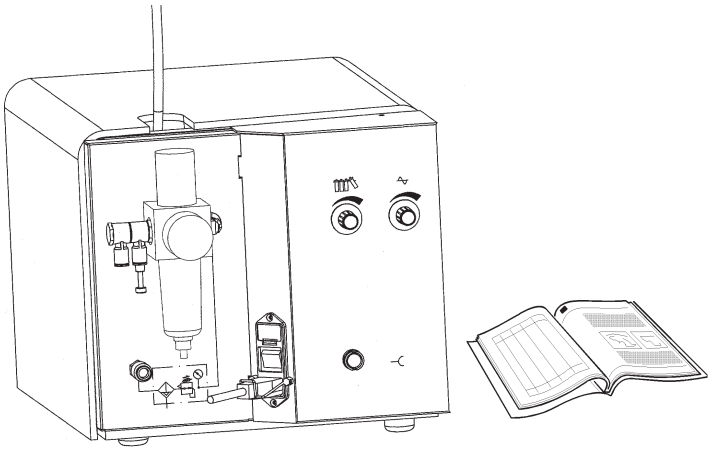

- Inspect the shipment for visible damage and completeness immediately on receipt.
- Report any transport damage or missing components immediately to the delivering shipping agent or the dealer (address, see page 2).
- We strongly recommend for the service department to carry out a functional check before using the VBZ.

4 Accessories

For Example:

Change over set for KAH 412/PAH-1	94-43-2..B
Feeding tube complete	80-43-3..A

Additional accessories can be found in our extensive accessories catalogue.

All rights reserved – Reprinting, in whole or in part, only with the approval of the manufacturer

5 Technical Data

Fully Automatic Stud Feeder VBZ-3
for studs with flange according to current standards

Stud diameter	#4 to 5/16‘‘, dia. #4 to 5/16‘‘ (M3 to M8, dia. 3 to 8 mm) other diameter on request
Stud length	0.31‘‘ to 1.97‘‘ (8 to 50 mm)
Welding material	Mild steel, stainless steel, aluminum, brass
Feed speed	Up to 30 studs/min (depending on welding element and feeding tube)
Compressed Air Connection	6 bar, 800 liter/min
Electrical supply	115 V, 60 Hz, 1.8 A (alternative input voltages available)
IP Code	IP 20 (protect against humidity)
Ambient temperature limits	32 °F to 104 °F (0 °C to 40 °C)
Dimension L x W x H	18.50‘‘ x 12.20‘‘ x 11.02“ (470 x 310 x 280 mm) without cable
Weight	Approx. 52.91 lbs (24 kg)

©HBS Bolzenschweiss-Systeme GmbH & Co. KG
All rights reserved – Reprinting, in whole or in part, only with the approval of the manufacturer

6 Intended Use

Our stud welding unit are designed and built exclusively for industrial use. Nonindustrial use is expressly forbidden due to the lack of know-how about the welding technology employed and the applicable standards.

This automatic stud feeder (VBZ) is intended exclusively for stud welding of standardised welding elements. Any other use will result in malfunction during the feeding of the welding elements.

The stud welding units ARC 800-4, IT 1002-4, IT 1002-6, IT 50, IT 90, CDMi 2402, CDMi 3202, CDi 1502-4, the welding gun PAH-1 or the welding heads KAH 412 and KAH 412 LA may only be connected to this automatic stud feeder.

The intended use also implies observance of the operating manual on the stud welding unit, the welding gun or the welding head used and compliance with the intervals and conditions for inspection and maintenance of the stud welding unit and the components employed.

- Always check with the operating manual of your stud welding unit and the used components whether they may be used with this automatic stud feeder.

The stud welding unit must be suitable for welding the welding elements in use.

Welding elements manufactured with the cold formed process have a flange and an ignition tip. During welding, the flange prevents the arc getting to the cylindric part of the welding element and increases simultaneously the welding area.

- **Please refer to the operating manual of your stud welding unit for detailed information on which welding elements may be used.**

All rights reserved – Reprinting, in whole or in part, only with the approval of the manufacturer

7 Warranty

Please refer to the latest "General Terms and Conditions" for the scope of the warranty.

The warranty does not cover faults caused by e.g.

– Normal wear,
– Improper handling,
– Failure to observe the operating manual,
– Failure to observe the safety precautions,
– Use for other than the intended purpose, or
– Transport damage.

Warranty entitlement shall no longer be valid if modifications, changes or service and repair work is carried out by unauthorised persons or without the knowledge of the manufacturer. Invalidation of warranty entitlement shall also render the declaration of conformity invalid. The CE marking shall be declared invalid by the manufacturer.

We expressly point out that only spare parts and accessories or components approved by us may be used. The same applies likewise to installed units from our sub-suppliers.

©HBS Bolzenschweiss-Systeme GmbH & Co. KG

All rights reserved – Reprinting, in whole or in part, only with the approval of the manufacturer

8 Configuration and Function

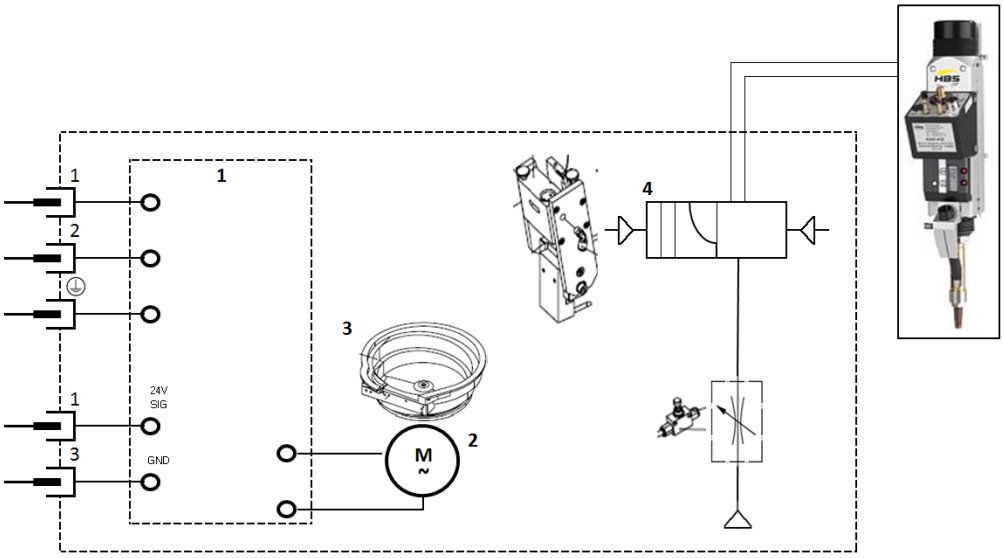

The fully automatic stud feeder consists of the main components

1- Control	2 - Impulse vibrator
3 - Feeding bowl	4 - Separator cage

Studs are poured into the **feeding bowl (3)**, fed into the **separator cage (4)** in a correct position and passed on to the welding head.

The control unit co-ordinates the mechanical process (feeding of welding elements).

Vibration intensity and overtravel time are fully adjustable.

Type plate

The type plate contains the following information:

– Manufacturer
– Type
– Order No./Serial-No.
– Primary voltage
– Fuse
– Power consumption
– Cooling class
– IP Code
– Date

All rights reserved – Reprinting, in whole or in part, only with the approval of the manufacturer

9 Welding Process

This fully automatic stud feeder is designed to be used for the following welding processes:

– capacitor discharge (contact- or gap welding)

– drawn arc (short-cycle stud welding, drawn-arc welding with shielding gas)

The process flow of the welding process can be found in the original operating manual of the used stud welding unit.

©HBS Bolzenschweiss-Systeme GmbH & Co. KG

All rights reserved – Reprinting, in whole or in part, only with the approval of the manufacturer

10 Preparing the Fully Automatic Stud Feeder (VBZ)

10.1 Adjusting the VBZ

- Remove the cover on the separator cage.
- Take care not to lose the o-ring *(item 20)*, which is located between the cover and separator cage.

Without the o-ring, feed problems will occur.

- Loosen the screw *(item 1)* to swivel the feeding bowl *(item 10)*.
- Loosen the two screws *(item. 3)*; the separator *(item 9)* can then be adjusted in the vertical direction with the screw *(item 2)*.
- Loosen the screws *(items 4 and 5)* to adjust the angle of inclination to the feeding guide *(item 11)*.
- If the screws *(item 6)* are loosened, the entire unit *(item 9)* can be moved horizontally and turned slightly.

All rights reserved – Reprinting, in whole or in part, only with the approval of the manufacturer

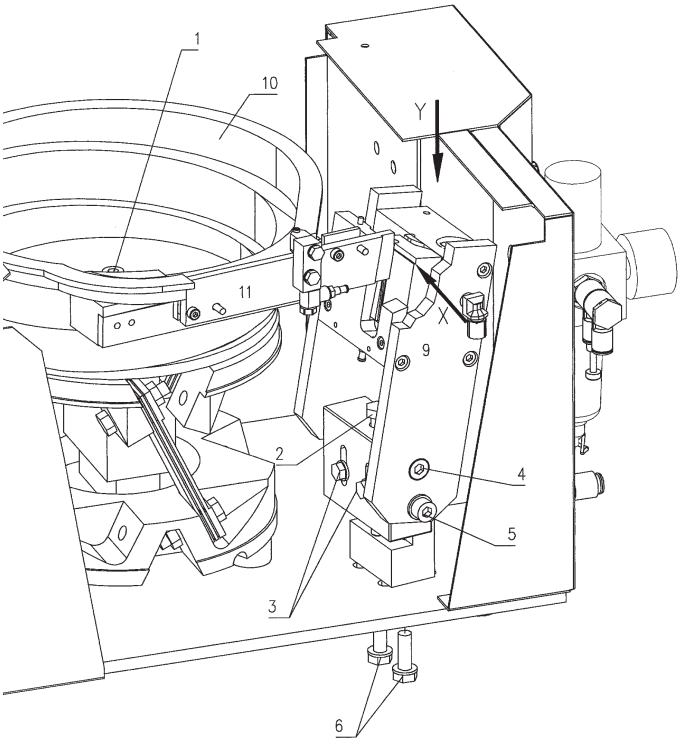

Detail drawings Y and X show an optimally adjusted VBZ at the stud transfer point.

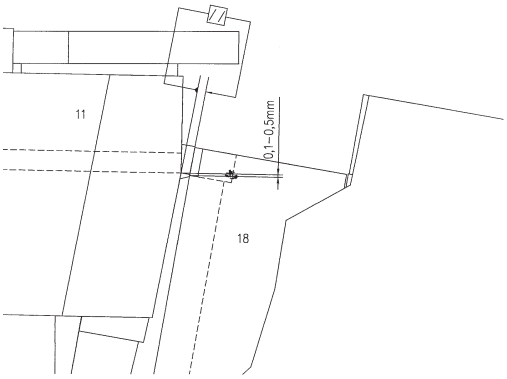

Drawing X

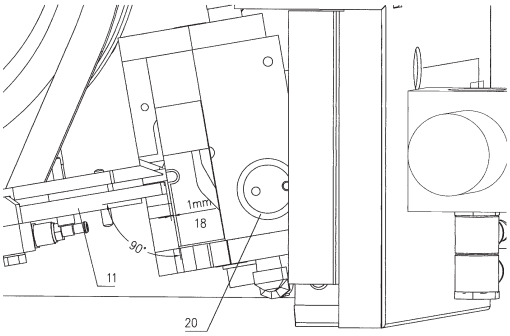

Drawing Y

©HBS Bolzenschweiss-Systeme GmbH & Co. KG
All rights reserved – Reprinting, in whole or in part, only with the approval of the manufacturer

10.2 Changing-over the VBZ

- Pull out the mains plug.
- Disconnect connecting cable 92-40-032 from the stud welding unit.
- Unplug the compressed air supply at the bush *(item 5)*.

Danger from moving parts

- Before working on an open device, make certain that the VBZ is depressurised.

- You can now remove the two knurled cap screws *(item 17)* from the separator cage.
- Remove the stud feeding tube *(item 15)* with separator cage cover *(item 16)*.
- Remove the studs from the feeding bowl *(item 10)*, the feeding guide *(item 11)* and the slide *(item 18)*.

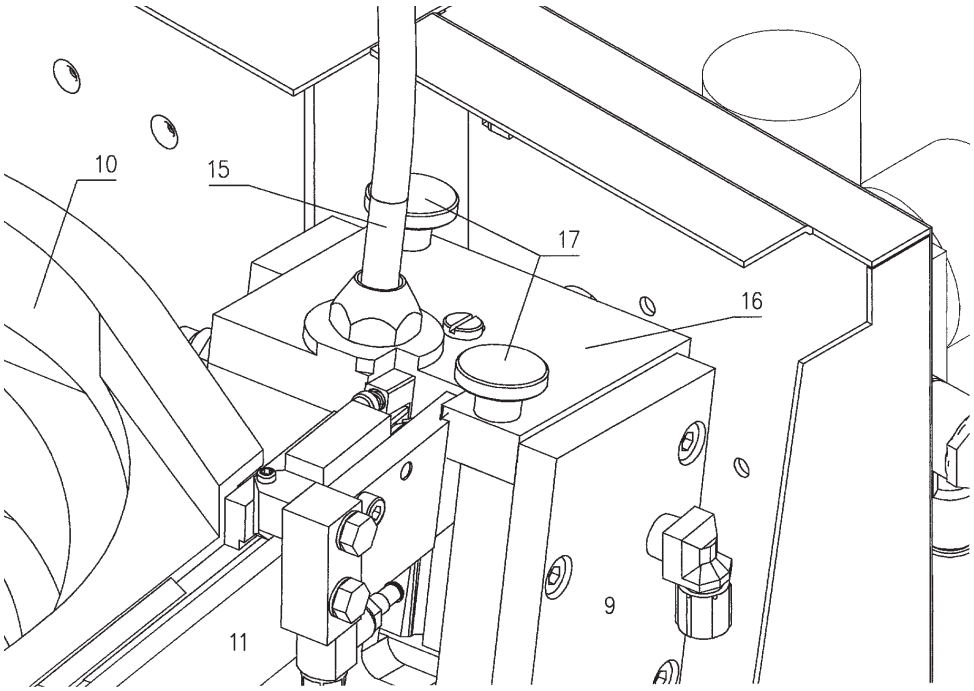

- Loosen the two screws *(item 13)* and remove the spacers *(item 12)*.
- Pull the slide out of the separator cage (9).

All rights reserved – Reprinting, in whole or in part, only with the approval of the manufacturer

- Insert the changeover slide *(item 18)* into the separator cage *(item 9)*.

Caution!

The groove machined into the slide *(item 18)* must be plugged into the carrier in the separator cage *(item 9)*!

- Place the changeover parts *(item 12)* in the outlet and tighten the two screws *(item 13)*.
- Now place the changeover cover *(item 16)* with feeding tube *(item 15)* on the separator cage *(item 9)*.

Caution!

The blind hole in the cover *(item 16)* must engage with the cylindrical pin on the separator cage *(item 9)* and the no. 20 o-ring must be in the recess of the separator cage.

- Tighten the two knurled cap screws *(item 17)*.
- Now fill your studs in the feeding bowl (*item 10*).

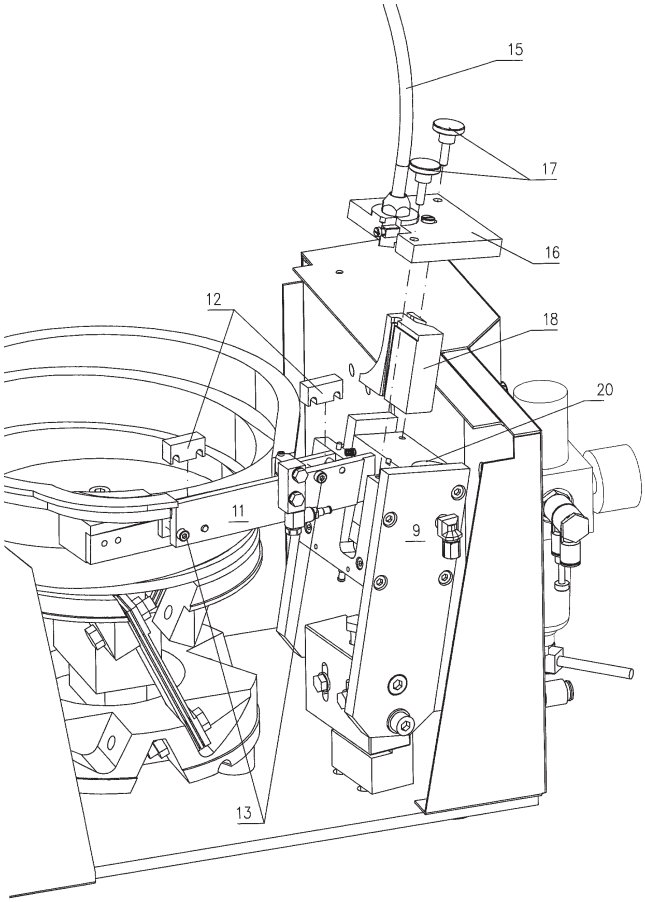

©HBS Bolzenschweiss-Systeme GmbH & Co. KG
All rights reserved – Reprinting, in whole or in part, only with the approval of the manufacturer

10.3 Inspection Tasks Prior to Commissioning

◆ Prior to every commissioning, ensure that

① the hose couplings are screwed to the stop block on the feeding tube,

② the hose couplings are securely screwed at the feed tube and at the separator cover,

③ the feed tube is locked in the welding head,

④ the separator cover is securely screwed to the separator cage with the two knurled cap screws,

⑤ the feeding tube has been inspected for impermissible wear,

⑥ the feeding tube is not operated under mechanical stress.

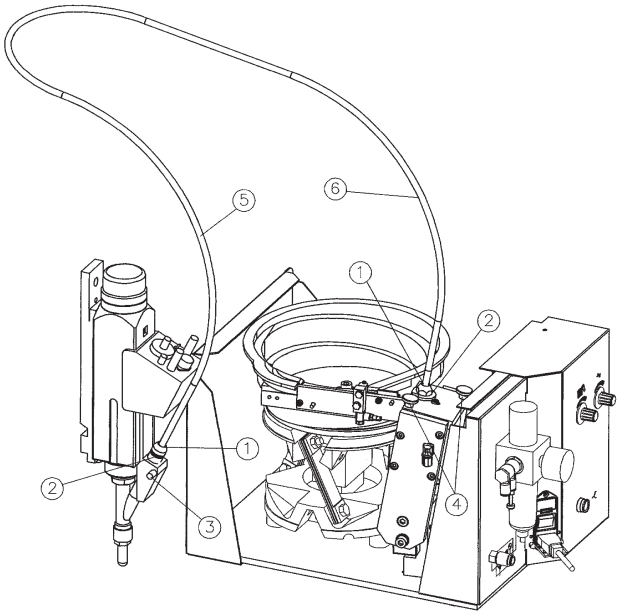

Your VBZ is now ready for commissioning.

All rights reserved – Reprinting, in whole or in part, only with the approval of the manufacturer

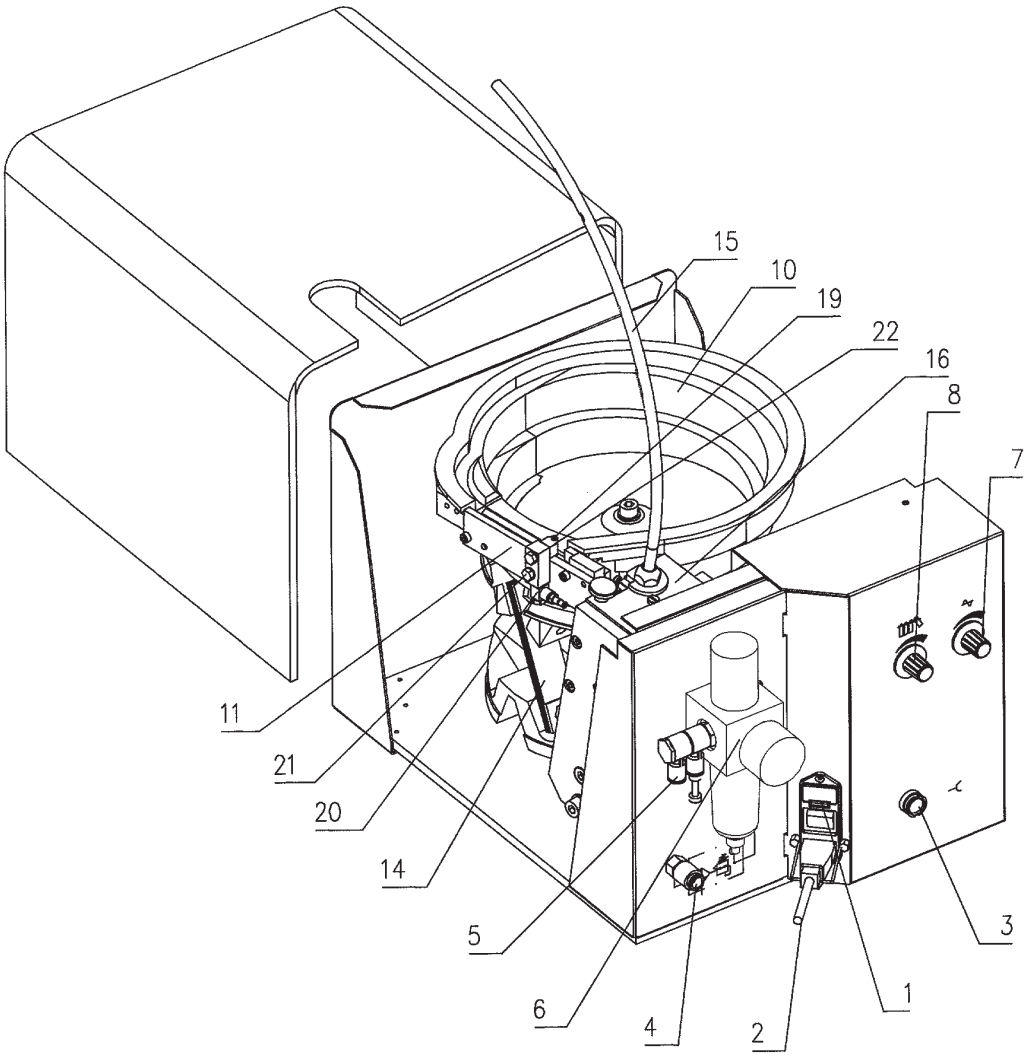

1 - Mains switch
2 - Mains cable
3 - Control cable sleeve
4 - Connector female compressed air
5 - Bush for supply air
6 - Service unit
7 - Controller for vibration intensity
8 - Controller for overtravel time
10 - Feeding bowl
11 - Stud outlet guide
14 - Impulse vibrator
15 - Feeding tube
16 - Cover for separator
19 - Screw for air supply controlling
20 - Butterfly valve
21 - Female bushings
22 - Air nozzle

©HBS Bolzenschweiss-Systeme GmbH & Co. KG
All rights reserved – Reprinting, in whole or in part, only with the approval of the manufacturer

10.4 Connecting the VBZ to the Mains Supply

Electric shock hazard

- Leave the VBZ switched off while connecting the cable connections.

In this way you can avoid any unintentional starting of the welding process.

- Compare the mains voltage indicated on the type plate with the voltage of your mains supply.

The type plate is located on the rear side of the fully automatic stud feeder.

- **Connect the fully automatic stud feeder only to a mains supply with the same mains voltage as that indicated on the type plate.**
- Compare the current consumption indicated on the type plate with the fuse of your mains supply.
- Have an electrician check whether the plug socket to which you intend to connect the fully automatic stud feeder is correctly earthed.

- Set the mains switch (1) to the 0 position.
- Place the VBZ-3 at the intended location on a base directly accessible from above.

- **Make certain that the base (table, etc.) has the necessary load capacity.**

- You can now plug the mains cable into the VBZ-3 and secure it with the cord retaining clamp.
- Connect the mains cable plug (2) into the inspected plug socket.

All rights reserved – Reprinting, in whole or in part, only with the approval of the manufacturer

10.5 Connecting the VBZ to Compressed Air

- Connect the connecting cable between the stud welding unit and VBZ-3 in bush (3) and the intended bush on the stud welding unit.
- Securely screw the feeding tube (15) into the cover (16).
- Now plug the feed tube into the automatic welding head or into the automatic welding gun and secure the feed tube against loosening.
- Plug the air-supply tube into the bush (5).
- Connect the air outlet (4) to the stud welding unit.
- You can now set the operating pressure on the maintenance unit (6) to 6 bar.

The following connections must be established in order to operate the device:

Mains voltage:	115 V / 60 Hz
Air:	6 bar / 800 litre/min.

DIN plug socket with tested earthing or permanently installed machine terminal strip

☞ **The VBZ-3 may only be used in combination with stud welding units that are suitable for automated use.**

©HBS Bolzenschweiss-Systeme GmbH & Co. KG

All rights reserved – Reprinting, in whole or in part, only with the approval of the manufacturer

10.6 Filling Studs

◆ **Only use studs from the same lot!**

Risk of injury from uncontrolled, flying welding elements

◆ **Only fill the feeding bowl when the stud feeder is switched off!**

Due to the high infeed speed, welding elements could be ejected. These welding elements that are ejected in an uncontrolled manner could cause serious injury.

◆ Remove the casing cover.

◆ Fill the studs that are to be welded in the feeding bowl (10) (please observe filling level).

◆ Now remount the casing cover.

◆ You can now set the mains switch (1) to the "I" position.

◆ Set the run-on switch (8) to 0; the impulse vibrator (14) now operates continuously.

◆ Set the power (7) of the impulse vibrator according to the stud weight so that the bolts move up slowly along the spirals of the sorting bowl.

The run-on switch remains in the 0-position until the outlet is completely filled with studs.

◆ Set the run-on switch to approx. level 5; this ensures continuous filling of the outlet during operation.

The butterfly valve (20) can regulate the blow-off air at the outlet as needed.

The screw (19) can be used to throttle the air supply for pressing down the studs as needed.

The female bushing (21) can be used to change the position and angle of inclination of the air nozzle (22).

Your VBZ is now ready for operation.

All rights reserved – Reprinting, in whole or in part, only with the approval of the manufacturer

10.7 Setting the Overtravel Time and Vibration Intensity

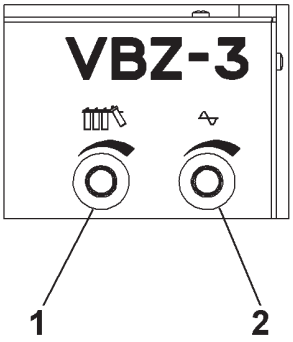

1 - overtravel time

2 - vibration intensity

Vibration intensity	=	Intensity of vibration performance
Overtravel time	=	Duration of vibration performance
Level 0	=	Continuous operation

The vibration intensity and the overtravel time are fully adjustable.

The stud feeding time (blow time) is set on the stud welding unit.

◆ For further information, see the operating manual of the used stud welding unit, chapter ***„Setting the stud feeding time“***.

©HBS Bolzenschweiss-Systeme GmbH & Co. KG

All rights reserved – Reprinting, in whole or in part, only with the approval of the manufacturer

11 Welding

- **Work according to the *original operating manual of the HBS stud welding unit*.**

Danger if used other than for the intended purpose

- Use the fully automatic stud feeder only for CD stud welding or ARC stud welding and only in combination with stud welding units from manufacturer:

HBS Bolzenschweiss-Systeme GmbH & Co. KG
Felix-Wankel-Strasse 18
85221 Dachau
GERMANY

- Always check with the operating manual of your stud welding unit whether this fully automatic stud feeder may be used.

All rights reserved – Reprinting, in whole or in part, only with the approval of the manufacturer

12 Troubleshooting

Danger from insufficiently qualified operating personnel

- Carry out only the work described here on your stud feeder.
- Repairs may only be carried out by appropriately qualified personnel.
- Inform your dealer or your maintenance department.

Malfunction	Possible cause	Fault finding	Fault correction	Carried out by
VBZ is not feeding	Stud welding unit not switched on	Check stud welding unit	Switch on stud welding unit	Trained personnel
	No primary power	Check primary power connection, cable and fuse*)	Change primary power connection, cable and fuse*)	Qualified specialists
	Feed hose is bended, welding elements can not pass	Check feed hose	Make feed hose free of bends	Trained personnel
	Not sufficient air pressure	Check air pressure (6 to 7 bar)	Adjust air pressure	Trained personnel
	Connecting cable is not connected to VBZ or to stud welding unit	Check connecting cable	Plug connecting cable into bush	Trained personnel
		Check stud feeding time on stud welding unit (may be too short)	Reset stud feeding time	Trained personnel
	VBZ not switched on	Check VBZ	Switch on VBZ	Trained personnel
Slide in separator cage is not moving	Feed hose is bent at the connection and welding elements are blocking the slide	Check feed hose	Make feed hose free of bends	Trained personnel
	Welding elements get stuck in feeding rail	Check passage between feeding rail and stud reparation into tube	Remove stud	Trained personnel
VBZ is not working	Defective fuse	Check fuse*)	Change fuse *)	Qualified specialists
	Defective circuit board	Check circuit board*)	Change circuit board*)	Qualified specialists

©HBS Bolzenschweiss-Systeme GmbH & Co. KG
All rights reserved – Reprinting, in whole or in part, only with the approval of the manufacturer

Work marked with *) may only be carried out by qualified electricians!

- Please contact our Service department if none of the measures described remedies the situation.
- Please use the „Service & Support“ form in the Annex to send in the automatic stud feeder.

All rights reserved – Reprinting, in whole or in part, only with the approval of the manufacturer

13 Maintenance and Care

Electric shock hazard

- Always switch off the stud feeder before starting maintenance and care work.
- Pull out the mains plug.
- Never perform maintenance and service work on the VBZ while it is connected to the stud welding unit.
- Prior to this disconnect the VBZ from the stud welding unit.
- Disconnect the air pressure supply.

Danger from insufficiently qualified operating personnel

- Carry out only the work described here on your stud feeder.
- Repairs may only be carried out by appropriately qualified personnel.
- Inform your dealer or your maintenance department.

13.1 Cleaning

- When needed clean the casing of your automatic stud feeder with a humid washcloth.

- **Do not use solvents for cleaning.**

These may damage the used plastic components.

©HBS Bolzenschweiss-Systeme GmbH & Co. KG
All rights reserved – Reprinting, in whole or in part, only with the approval of the manufacturer

13.2 Inspection and Tests

- ◆ Inspect your VBZ prior to every use.
- ◆ Prior to every use, check whether the type designations and adjustment aids on the VBZ are still legible.
- ◆ Clean the type plates in the event of soiling.
- ◆ Replace any type plates that are damaged or no longer legible.

Inspect the following components for stability, wear and soiling in monthly intervals:

- – feed tube
- – hose couplings at the feed tube and separator cover
- – feed hose
- – screws on the separator cover, stud outlet and infeed guide as well as separator cage
- – driving screw in the separator cage
- – slide
- – ease of movement of the sealing mechanism in the separator cover
- – adjustment of separation to stud outlet guide
- – feeding bowl
- – service unit
- – mains cable and connecting cable
- ◆ Inform your dealer or your maintenance department about this.

Risk of injury from uncontrolled, flying welding elements

◆ **Never work with damaged or incorrectly seated components**!

Incorrectly seated hose couplings could loosen. Due to the high infeed speed, welding elements could be ejected from a damaged feed hose.

These welding elements that are ejected in an uncontrolled manner could cause serious injury.

◆ Inform your dealer or your maintenance department if you notice any damage.

All rights reserved – Reprinting, in whole or in part, only with the approval of the manufacturer

14 Storage

- Store the fully automatic stud feeder (VBZ) in a safe and dust-free location when not in use.
- Protect the VBZ from moisture and metallic contamination.

- Store the VBZ only under the following ambient conditions.

Storage temperature:

23 °F to 252 °F (-5 °C to +50 °C)

Relative humidity:

0 % - 50 % at 104 °F (+40 °C)
0 % - 90 % at 68 °F (+20 °C)

15 Disposal

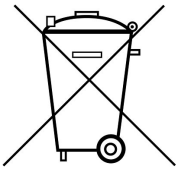

- Dispose of VBZ only via the manufacturer or a specialist disposal company.
- Never dispose of the VBZ in the domestic refuse.

©HBS Bolzenschweiss-Systeme GmbH & Co. KG
All rights reserved – Reprinting, in whole or in part, only with the approval of the manufacturer

Service & Support

With the return please attach a copy of the filled out form together with the repair number given by HBS! Repairs without repair number will not be processed.

Repair number
(given by HBS)

_____

Company: _____
Name / Surname: _____
Street: _____
City, State and ZIP/Postcode: _____
Country: _____
Phone & Fax: _____
E-mail address: _____

Stud welding unit / stud welding gun type of model: _____
Serial number: _____
Date of purchase: _____
Purchased at distributor: _____

Detailed descriptions of errors: _____

Service & Support may be done up to the value of EUR _____ without quotation: ☐ Yes ☐ No

Could you find any damage / burn marks

on the cables: ☐ Yes ☐ No

on chucks: ☐ Yes ☐ No

Are all plug and screw connections tightly fastened *: ☐ Yes ☐ No

Are there any burn marks on plug or screw connections: ☐ Yes ☐ No

Is there any other visual damage (e.g. cracks, dents): ☐ Yes ☐ No

Have you checked the fuses: ☐ Yes ☐ No

Default on the display of the stud welding unit:

ARC / IT					CD / CDM / SC					
○	⊗				●		⊗			**

Which LED´s are illuminated (please mark with a cross)?

Please e-mail or fax this form to service@hbs-info.de or fax: +49 8131 511-100.
In case a repair is necessary a repair number will be given!

* See also operating manual chapter „Connection“
** Doesn´t light when using a contact welding gun

All rights reserved – Reprinting, in whole or in part, only with the approval of the manufacturer

Index

A
accessories 13
airborne particulates 7
automatic welding head. 12

B
bang. 8
basic configuration. 13

C
capacitor 12
cleaning 32
clothing, non-flammable 8
configuration 17
connecting the VBZ 25, 26
control 17

D
danger from incorrect use 6
disposal 34

E
ear protection. 10
electrical hazards. 10
electric arc 12
electromagnetic fields 10
EMF directive, safety notices. 9

F
feeding bowl 17
filling level 27
fire extinguisher 8
fire hazard 8
form „Service & Support“ 35
full-ear hearing protection 8
fumes, harmful to health 7

G
glossary 12
goggles with visor 8

H
hazards for the machine 10
hazards for the operator 10
heart pacemaker 7, 10
helmet 8

I
impulse vibrator 17
inspection and tests. 33
inspections, monthly 33
intended use 15, 29

M
maintenance and care 32

O
operating manual. 13
overtravel time 28

P
protective apron. 8
protective equipment 8
protective equipment, personal 10
protective gloves 8

R
rectifier. 12
run-on 27

S
safety goggles 10
safety goggles with sight glass 8
safety precautions 6
scope of supply 13
separator cage. 17
storage. 34
storage temperature 34
stud feeder. 12
stud welding gun 12
stud welding system 12
stud welding unit 12
symbols used. 10

T
troubleshooting 30
type plate 17

V
vibration intensity. 28

W
warranty entitlement 16
welding element. 12
welding parameters 12
workpiece 12

©HBS Bolzenschweiss-Systeme GmbH & Co. KG

All rights reserved – Reprinting, in whole or in part, only with the approval of the manufacturer

HBS Bolzenschweiss-Systeme GmbH & Co. KG
Felix-Wankel-Strasse 18 • 85221 DACHAU • GERMANY
Phone +49 8131 511-0 • Fax +49 8131 511-100 • E-mail international@hbs-info.com

www.hbs-info.com