Pegasar 500 accu

Stud Welding Unit

92-12-0500

Operating Manual

2024

Customer Service:

HBS Bolzenschweiss-Systeme GmbH & Co. KG
Felix-Wankel-Straße 18
85221 DACHAU
GERMANY

Phone **+49 8131 511-0**
Fax **+49 8131 511-100**
E-mail **sales@hbswelding.systems**
Web **www.hbswelding.systems**

Pegasar 500 accu Operating Manual
Issue 2024-11 Order No. US-BA 92-12-0500

Translation of the Original Operating Manual

Please keep the manual in a safe place for future reference.

Transmission and duplication of this document, dissemination and notification of the contents are not permitted unless expressly approved.

All rights, errors and technical amendments reserved.

© HBS Bolzenschweiss-Systeme GmbH & Co. KG

Dear Customer,

Many thanks for buying a stud welding machine from HBS Bolzenschweiss-Systeme.

We at HBS wish you success at all times when working with this stud welding machine.

The high level of quality of our products is guaranteed by ongoing further development in the design, equipment and accessories. This may result in differences between the present operating manual and your product. No claims can therefore be derived from the data, illustrations and descriptions.

We have compiled the data and information in this reference work with the greatest care, and have made every effort to ensure that the information contained in this manual was correct and up-to-date at the time of delivery. We can nevertheless give no guarantee for an absolutely error-free document.

Should you discover any errors or unclear points when reading this operating manual, please do not hesitate to contact us.

We would also be grateful for any feedback should you have any suggestions or complaints to make about our product.

HBS Bolzenschweiss-Systeme GmbH & Co. KG

Felix-Wankel-Strasse 18

85221 Dachau

GERMANY

All rights reserved – Reprinting, in whole or in part, only with the approval of the manufacturer

Table of Contents

1 Important Safety Precautions 6

2 Symbols and Terms Used 11

3 Scope of Supply 14

4 Accessories 15

5 Technical Data 17

6 Intended Use 19

7 Warranty 20

8 Components of the Stud Welding Unit 21

8.1 Main Assemblies 22
8.2 Operation Panel and Display 24
8.3 Indicator Lights 26
8.4 Mains Switch 27
8.5 Securing the Battery 28

9 Welding Process 29

9.1 Contact Stud Welding 29

10 Preparing Workplace and Welding Process 31

10.1 Preparing Surfaces 32
10.2 Checking the Stud Welding Gun 33

11 Connection 34

11.1 Removing the Transport Protection 35
11.2 Connecting the Stud Welding Gun to the Stud Welding Unit 35
11.3 Connecting the Ground Cable 36

©HBS Bolzenschweiss-Systeme GmbH & Co. KG
All rights reserved – Reprinting, in whole or in part, only with the approval of the manufacturer

12 Welding 37

12.1 Switching on the Stud Welding Unit 38
12.2 Determining the Charging Voltage 40
12.3 Setting the Charging Voltage 42
12.4 Performing the Welding Process 43
12.5 Charging the Battery 47
12.6 Automatic Shutdown 49

13 Checking the Quality of the Weld 50

13.1 Carrying out Visual Inspection 50
13.2 Carrying out Bending Test 51
13.3 Optimisation of Welding Parameters 52
13.4 Blowing Effect and Remedies 53

14 Troubleshooting 54

15 Shutting Down 56

16 Maintenance and Care 57

16.1 Cleaning 57
16.2 Inspection and Tests 58
16.3 Replacing the Battery 58

17 Storage 60

18 Disposal 62

19 Returns 62

Service & Support 63

Index 64

All rights reserved – Reprinting, in whole or in part, only with the approval of the manufacturer

1 Important Safety Precautions

The target group for this manual are qualified personnel who in view of their technical training, know-how and experience and knowledge of applicable regulations are able to assess the work assigned to them and recognise potential hazards.

Danger from incorrect use

- Use the stud welding machine only for the purpose described in this manual.

Otherwise you may endanger yourself or damage the stud welding machine.

You endanger yourself and others if you operate the stud welding machine incorrectly or fail to observe the safety precautions and warnings. This can lead to serious injury or extensive material damage.

Danger for unauthorised operating personnel

- Work with the stud welding machine only when
  - You are appropriately trained, instructed and authorised to do so, and
  - You have read and completely understood this operating manual.
- Never work with the stud welding machine when you are under the influence of
  - Alcohol,
  - Drugs or
  - Medication.

Danger from unauthorised modifications

- Never modify the stud welding machine or parts thereof without obtaining a clearance certificate from the manufacturer.

You will otherwise endanger yourself. This can lead to serious injury or extensive material damage.

©HBS Bolzenschweiss-Systeme GmbH & Co. KG

All rights reserved – Reprinting, in whole or in part, only with the approval of the manufacturer

Life-threatening danger for wearers of active implanted cardiac devices

Danger for workers at particular risk within the meaning of the EMF directive

Persons at particular risk within the meaning of the EMF directive are:

– Workers with active implanted medical devices
– Workers with passive implanted medical devices that contain metal
– Workers with medical devices worn on the body
– Pregnant workers.

◆ Never operate the stud welding machine if you are among the group of workers at particular risk within the meaning of the EMF directive.
◆ In this case, never remain in the vicinity of the stud welding machine during welding.
◆ Never operate the stud welding machine if persons are located nearby who are among the group of workers at particular risk within the meaning of the EMF directive.

Strong electromagnetic fields are produced in the vicinity of the stud welding machine during welding. These fields can adversely affect the function of medical devices as well as the course of a pregnancy.

Danger from fumes and airborne particulates

◆ Switch on the welding fume extractor at the place of work.
◆ Ensure that the room is well ventilated.
◆ Never weld in rooms with a ceiling height of less than 3 m.
◆ Observe furthermore your working instructions and the accident prevention regulations.

This will help to avoid health damage due to fumes and airborne particulates.

All rights reserved – Reprinting, in whole or in part, only with the approval of the manufacturer

Danger from glowing metal spatter (fire hazard)

Glowing hot weld spatter and liquid splashes, flashes of light and a loud bang > 90 dB (A) must be anticipated during stud welding.

- Inform colleagues working in the immediate vicinity accordingly before starting work.
- Ensure that an approved fire extinguisher is available at the workplace.
- Do not weld when wearing working clothes soiled with flammable substances such as oil, grease, petroleum, etc.
- Wear your proper protective equipment, such as:
  - Protective gloves in accordance with the relevant standard,
  - Non-flammable clothing,
  - A protective apron over your clothing,
  - Full-ear hearing protection in accordance with the relevant standard,
  - A safety helmet when welding above your head,
  - Safety shoes,
  - Safety goggles with sight glass of protection level 2 in compliance with the applicable standards and do not look directly into the electric arc.
- Remove all flammable materials and liquids from the vicinity of the work area before starting welding.
- Weld at a safe distance from flammable materials or liquids. Select a safety distance large enough to ensure that no danger can arise from weld spatter.

Protection of the stud welding unit

- Protect the stud welding machine against the ingress of foreign matter and liquids caused by cutting or grinding work in the vicinity of your work area.

This will help to prolong the service life of your stud welding machine.

©HBS Bolzenschweiss-Systeme GmbH & Co. KG

All rights reserved – Reprinting, in whole or in part, only with the approval of the manufacturer

Safety precautions for lithium-ion batteries

Danger due to improper use

If used incorrectly or improperly (disassembly, breakage, exposure to fire and high temperatures), lithium-ion batteries can catch fire, explode or cause fires.

Batteries contain combustible or caustic solutions and lithium salts, which, if they leak, can lead to irritation of the skin, eyes and mucous membranes. If batteries vent, released vapours could be hazardous to health.

- Avoid inhaling the vapours!
- In case of contact with leaking fluid, flush with water for at least 15 minutes and seek medical advice!

Danger due to highly reactive substances

Lithium is a highly reactive substance. Mechanical damage to batteries can cause internal short circuits and thereby lead to fires, explosions and injuries.

- Never work with damaged batteries.
- Before beginning work, check the condition of your battery.
- If possible, do not extinguish a burning battery with water, but rather with sand!

Danger due to improper storage

- Do not expose your battery to high temperatures or fire.

Contact with fire or temperatures in excess of 130 °C (265 °F) can cause explosions!

- Store your battery in a cool and dry place.

(Defective) lithium cells react violently with water, particularly when fully charged.

- Store your battery separately from other metallic objects, such as paper clips, coins, keys, nails, screws or other small metal objects, that could lead to bridging of the contacts.

A short circuit between the battery contacts can cause burns or a fire.

All rights reserved – Reprinting, in whole or in part, only with the approval of the manufacturer

Safety notices in accordance with EMF directive 2013/35/EU

Currents flowing through electrical conductors during stud welding cause electric and magnetic fields that can occur, in particular, near the hand-held welding guns, the welding arrangement (e.g., welding cables) and the welding power sources.

Due to the high currents, high EMF exposures may occur.

Danger for workers at particular risk within the meaning of the EMF directive

Persons at particular risk within the meaning of the EMF directive are:

– Workers with active implanted medical devices
– Workers with passive implanted medical devices that contain metal
– Workers with medical devices worn on the body
– Pregnant workers.

Strong electromagnetic fields are produced in the vicinity of the stud welding machine during welding.

To reduce the danger posed by electromagnetic fields, we recommend, among other things, the following rules of conduct:

◆ Lay all cables as close together as possible.

For proper bundling and safeguarding of the cables, HBS offers protective tubes in various sizes.

◆ Do not position yourself between the welding cables.

◆ Only lay the cables to one side and position them as far as possible from the operating personnel.

◆ Do not loop the cables over your body, especially not at head level.

◆ Completely unwind the welding cables.

◆ Use the shortest possible welding cables.

◆ Place portable welding power sources as far away as possible while welding.

◆ If possible, do not operate welding power sources in the immediate vicinity of other persons, do not sit directly next to the welding power source while working and do not lean against it.

◆ In addition to these safety notices, also observe your work instructions and accident prevention regulations.

©HBS Bolzenschweiss-Systeme GmbH & Co. KG

All rights reserved – Reprinting, in whole or in part, only with the approval of the manufacturer

2 Symbols and Terms Used

The symbols used in this operating manual have the following meanings:

Danger

Warns you of hazards that can lead to **injury of persons** or to **considerable material damage.**

Caution

Problems in operating **may occur** if this information **is not observed.**

No access for people with active implanted cardiac devices

No access for persons with implants made of metal

No access for pregnant women

Danger

Warns you of **electrical** hazards

Danger

Warns you of **electromagnetic fields** that can be generated during welding

These symbols prompt you to wear **personal protective equipment when working with the stud welding unit**.

This symbol prompts you to wear **ear protection**. **A loud bang > 90 dB (A) can occur during the welding process.**

All rights reserved – Reprinting, in whole or in part, only with the approval of the manufacturer

Tip

Cross-reference to **useful information** on the use of the stud welding machine

Cross-references in this operating manual are marked with this symbol or ***are printed in italics***

Fire hazard

Have a suitable fire extinguisher for the working area ready before starting work.

◆ **Work instruction**

– **List**

©HBS Bolzenschweiss-Systeme GmbH & Co. KG

All rights reserved – Reprinting, in whole or in part, only with the approval of the manufacturer

Glossary

Automatic welding head:	Device for welding of welding elements
Capacitor:	Component for storage of electrical energy.
Electric arc:	Autonomous gas discharge between two electrodes when the current is high enough. A whitish light is emitted in the process. The electric arc allows very high temperatures to be generated.
Rectifier:	Electrical component that converts alternating voltage into direct voltage
Stud feeder:	Device for automatic feeding of welding elements
Stud welding gun:	Device for welding of welding elements
Stud welding system:	Stud welding unit including stud welding gun or welding head
Stud welding unit:	Device for provision of the electrical energy for stud welding
Thyristor:	Electronic component for contact-free switching of high currents; switching takes place via the control input
Welding element:	Component such as stud or pin that is welded to the workpiece
Welding parameters:	Mechanical and electrical settings at the stud welding gun or welding head and at the stud welding unit (e.g. spring force, charging voltage)
Workpiece:	Components such as sheet metal or tubes to which the welding elements are to be fastened

All rights reserved – Reprinting, in whole or in part, only with the approval of the manufacturer

3 Scope of Supply

The **basic configuration** of your stud welding unit contains the following parts:

No. of pieces	Part	Type	Order No.
1	Stud welding unit	Pegasar 500 accu	92-12-0500
	Transport protection (when delivering with inserted battery)		88-24-081
1	Operating manual	Pegasar 500 accu	US-BA 92-12-0500

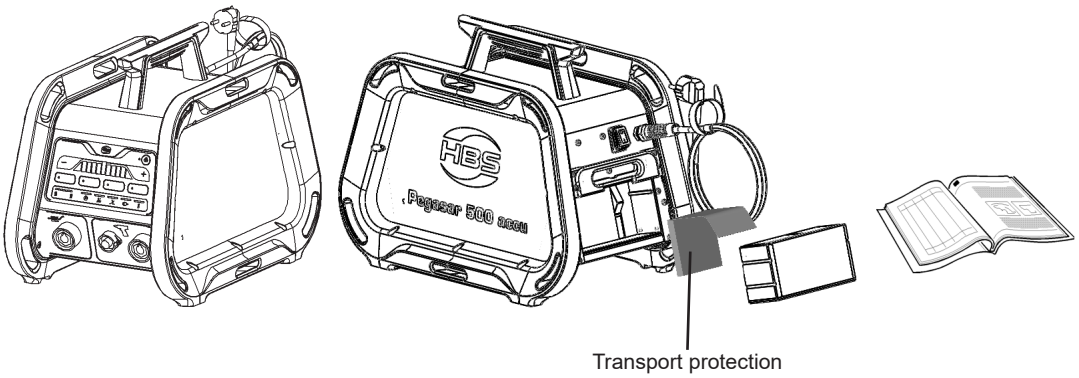

- Inspect the shipment for visible damage and completeness immediately on receipt.
- Report any transport damage or missing components immediately to the delivering shipping agent or the dealer (address, see page 2).

©HBS Bolzenschweiss-Systeme GmbH & Co. KG
All rights reserved – Reprinting, in whole or in part, only with the approval of the manufacturer

4 Accessories

The following **accessories** are available:

No. of pieces	Part	Type	Order No.
1	Ground cable for	Pegasar 500 accu 2.5 m, 25 mm², 1x10" vice grip (not extendable)	92-40-154
1	Battery (rechargeable)	Accu 150 25.55 V / 5.7 Ah / 145.64 Wh (LiNiCoAlO2)	88-23-484
1	Charging unit for battery *)	ACCU Charger 150	88-24-066
1	Transport protection for the transportation and shipping of the stud welding unit with inserted battery		88-24-081
1	Toolbag		88-24-466

Danger due to unsuitable batteries

◆ Only use the battery recommended by HBS in this stud welding unit.

Unsuitable batteries can lead to injuries and to significant damage to property!

Danger due to unsuitable charging units

◆ Only charge the battery with a charging unit recommended by HBS!

Unsuitable charging units can cause fires!

) The charging unit is only necessary for charging the battery outside of the stud welding unit. The battery in the stud welding unit is charged by connecting the stud welding unit to the primary power supply.

All rights reserved – Reprinting, in whole or in part, only with the approval of the manufacturer

The following **stud welding guns** are recommended:

	C 06-3	C 06-3	C 06-3	C 06-3
	• Easy handling • No setting for lift and spring force • Aluminium to M4			
Welding process	CD (Contact)			
Welding range*)	#4 - 1/4“, Ø 14 ga - 1/4“ (M3 - M6, Ø 2 - 6 mm)			#4 - 1/4“, Ø 14 ga - 1/4“ (M3 - M6, Ø 2 - 6 mm)
Stud length	0.24“ - 1.57“ (6 - 40 mm)	0.98“ - 2.17“ (25 - 55 mm)	0.24“ - 11.02“ (6 - 280 mm)	0.39“ - 1.57“ (10 - 40 mm) longer studs with optional accessories
Stud type	CD threaded studs (PT), pins (UT), pins with internal thread (IT), ground clips (single and double style)			
Welding cable	9.84 ft (3 m), 25 mm², SK 50 (not extendable)			
	Order No.	**Order No.**	**Order No.**	**Order No.**
	92-20-275 (welding gun C 06-3 with foot ring and feet)	**92-20-275** (welding gun C 06-3 with foot ring and feet) **92-40-010** (distance ring) not included in delivery	**92-20-275** (welding gun C 06-3 with foot ring and feet) **92-40-043** (ISO leg assembly PSI with 3-point rest) not included in delivery	**92-20-288** (welding gun C 06-3 incl. centering tube PPR-2)

*) recommended welding range Pegasar 500 accu / welding gun with this equipment

©HBS Bolzenschweiss-Systeme GmbH & Co. KG

All rights reserved – Reprinting, in whole or in part, only with the approval of the manufacturer

5 Technical Data

Stud welding unit Pegasar 500 accu

for stud welding with tip ignition (capacitor discharge welding) in accordance with the applicable standards

Welding range	Studs (mild steel, stainless steel): #4 to 1/4‘‘, dia. 1/8“ to 1/4“ (M3 to M6, dia. 3 to 6 mm); Studs (aluminium): #4 to #6, dia. 1/8“ to 5/32“ (M3 to M4, dia. 3 to 4 mm)
Welding material	Mild steel, stainless steel, aluminium
Welding rate	M3 = 40 studs/min. (Charging voltage 55 V) M6 = 20 studs/min. (Charging voltage 95 V)
Capacity	100 000 µF
Welding time	1 to 3 ms
Charging energy	500 Ws
Charging voltage	50 to 100 V (stepless voltage regulation)
Connection	100 V to 240 V, 50/60 Hz, 10 AT in battery operation: 25.55 V
Power source	Capacitor
Cooling method	F (temperature controlled cooling fan)
IP Code	with inserted battery: IP 44 (also permits use outdoors) without battery: IP 23 (also permits use outdoors)
Ambient temperature limits	32 °F to 104 °F (0 °C to 40 °C)
Dimension L x W x H	18.70” x 11.81” x 13.98” (475 x 300 x 355 mm) with handle
Weight	26.46 lbs (12 kg) incl. battery, 23.59 lbs (10.7 kg) without battery

All rights reserved – Reprinting, in whole or in part, only with the approval of the manufacturer

Battery (rechargeable)

Type	Accu 150 (7S2P INR18650 29E)
Energy/Capacity	145.64 Wh / 5.7 Ah
Nominal/charging voltage	25.55 V / 29.4 V
Max. charging current	3.0 A
Max. discharge current	17.0 A
Number of welds per battery charge	400 welds
Battery charging time	Max. 2.5 h (takes longer if welding at the same time)
Battery operating life	At least 400 charging cycles (at 800 charging cycles still approx. 60 % of the initial capacity)
Ambient temperature limits	32 °F to 104 °F (0 °C to 40 °C)
Dimension L x W x H	6.30“ x 2.40“ x 3.27“ (160 x 61 x 83 mm)
Weight	Approx. 2.866 lbs (1.3 kg)

©HBS Bolzenschweiss-Systeme GmbH & Co. KG
All rights reserved – Reprinting, in whole or in part, only with the approval of the manufacturer

6 Intended Use

Our stud welding units are designed and built exclusively for industrial use. Nonindustrial use is expressly forbidden due to the lack of know-how about the welding technology employed and the applicable standards.

The stud welding unit is intended exclusively for stud welding of standardised welding elements. Any other use will result in the desired strength of the welded joint being reduced.

This stud welding unit can only be used with the HBS stud welding gun C 06-3 and the ground cable (order no. 92-40-154).

The intended use also implies observance of the stud welding gun operating manual and compliance with the intervals and conditions for inspection and maintenance of the stud welding unit and the components employed.

- Always check the operating manual of your stud welding gun whether it may be used with this stud welding unit.

The stud welding unit must be suitable for welding the welding elements in use.

Welding elements manufactured with the cold formed process have a flange and an ignition tip. During welding, the flange prevents the arc getting to the cylindric part of the welding element and increases simultaneously the welding area.

- **Please refer to the operating manual of your stud welding gun for detailed information on which welding elements may be used.**

All rights reserved – Reprinting, in whole or in part, only with the approval of the manufacturer

7 Warranty

Please refer to the latest "General Terms and Conditions" for the scope of the warranty.

The warranty does not cover faults caused by e.g.

– Normal wear,
– Improper handling,
– Failure to observe the operating manual,
– Failure to observe the safety precautions,
– Use for other than the intended purpose, or
– Transport damage.

Warranty entitlement shall no longer be valid if modifications, changes or service and repair work is carried out by unauthorised persons or without the knowledge of the manufacturer. Invalidation of warranty entitlement shall also render the declaration of conformity invalid. The CE marking shall be declared invalid by the manufacturer.

We expressly point out that only spare parts and accessories or components approved by us may be used. The same applies likewise to installed units from our sub-suppliers.

©HBS Bolzenschweiss-Systeme GmbH & Co. KG

All rights reserved – Reprinting, in whole or in part, only with the approval of the manufacturer

8 Components of the Stud Welding Unit

The Pegasar 500 accu is ideal for use on construction sites:

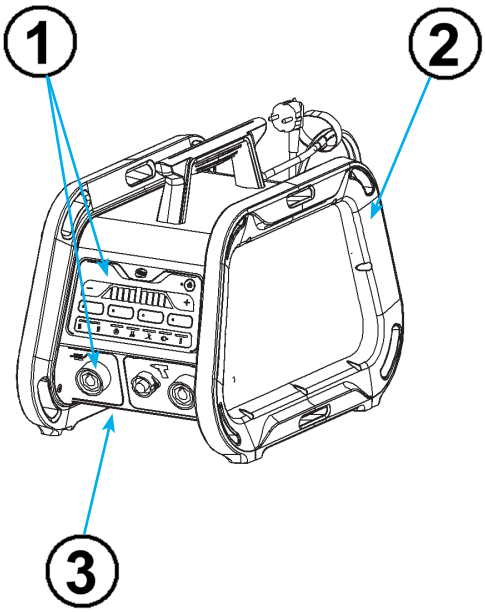

① **Protection from damage:**

– Recessed operation panel

– Recessed and slanted connection sockets

② **Sturdy configuration:**

– Circumferential side frame (bumper) made of PP foam

③ **Ground clearance:**

– Good stability on rough ground

– Protection against dirt and water

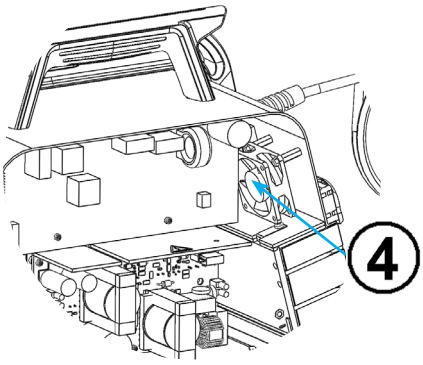

Protection against internal soiling:

④

– Internal fan

– Casing without ventilation slots to the outside

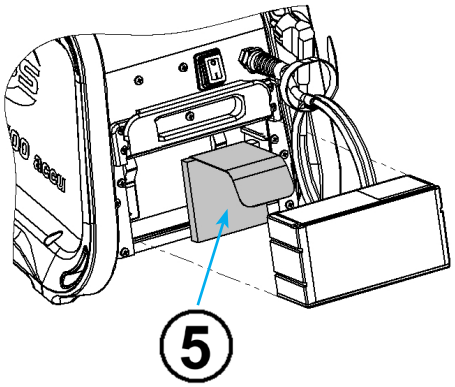

⑤ **Protection from unintentional start-up during transport:**

– Transport protection for separating the contacts between the stud welding unit and the battery

All rights reserved – Reprinting, in whole or in part, only with the approval of the manufacturer

8.1 Main Assemblies

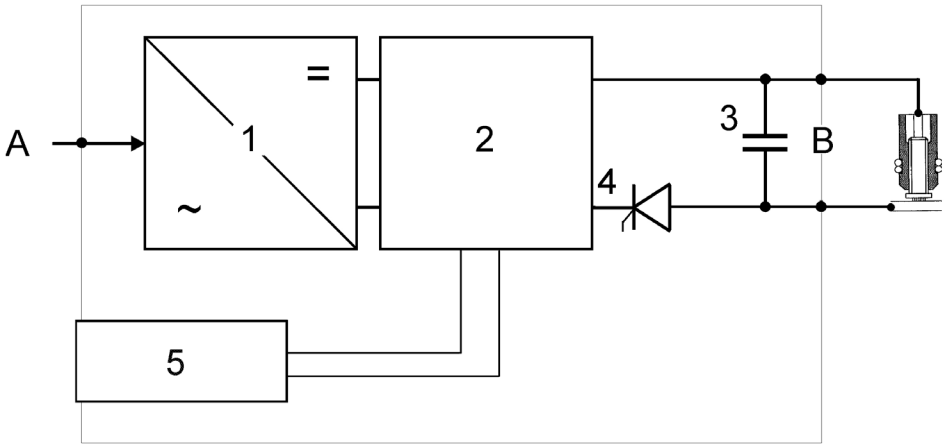

1- Power supply unit

2 - Control system

3 - Welding capacitors

4 - Welding thyristor

5 - Battery (rechargeable)

A - Mains connection

B - Welding circuit

The mains alternating voltage is converted to direct voltage in the **power supply unit (1)**. This direct voltage is fed to the **control system (2)**. The **battery (5)** is also connected to the control system. The charging process for the welding capacitors and the welding process are regulated by the control system. As long as the stud welding unit is supplied with mains voltage, energy is drawn from the mains supply and the battery charged (charging of the battery takes place during the welding and charging pauses). If no mains voltage is applied, power is drawn from the battery.

☞ For the welding process, only the energy in the welding capacitors is decisive. This ensures a consistent quality of the welded joint.

The quality of the welded joint is not dependent on whether welding is performed with mains supply or in battery operation. Likewise, the charge level of the battery does not affect the welding result.

©HBS Bolzenschweiss-Systeme GmbH & Co. KG

All rights reserved – Reprinting, in whole or in part, only with the approval of the manufacturer

The **welding capacitors (3)** store the energy required for the welding process. The energy quantity is defined by the operator via the operation panel.

Upon actuation of the button on the stud welding gun and upon detected contact of the welding element with the workpiece, the **welding thyristor (4)** releases the charging voltage.

The negative pole of the capacitor is connected to the stud welding gun. The positive pole is usually connected to the workpiece via vice grips.

The type plate is located on the rear of the stud welding machine.

Type plate

The type plate contains the following information:

– Manufacturer
– Type
– Order no./Serial no.
– Connection voltage
– Mains fuse
– Power consumption
– Cooling method
– Protection class
– Date

All rights reserved – Reprinting, in whole or in part, only with the approval of the manufacturer

8.2 Operation Panel and Display

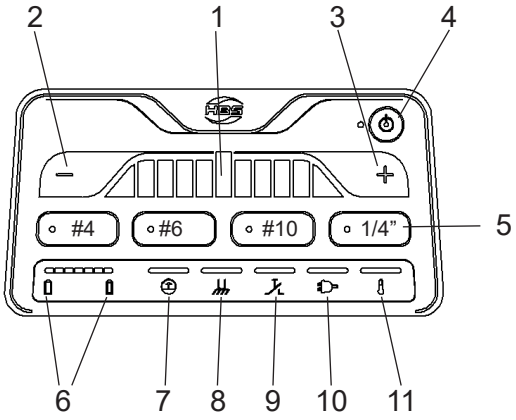

1 - Display for charging voltage

2 - Decrease

3 - Increase

4 - "On/Off" button

5 - Pushbuttons #4 to 1/4”

6 - Battery charge indicator

7 - Ready indicator

8 - Contact

9 - Pushbutton

10 - Mains mode

11 - Temperature

The stud welding unit is switched on and off via the **"On/Off" button (4)** on the display. (The toggle switch on the rear of the stud welding unit serves to safely disconnect the stud welding unit from mains.)

The **charge indicator LEDs (6)** indicate the current charge state of the battery.

If the stud welding unit is operated in mains mode, the **mains mode LED (10)** also lights up.

The LED on the **display (1)** shows the library value or program value:

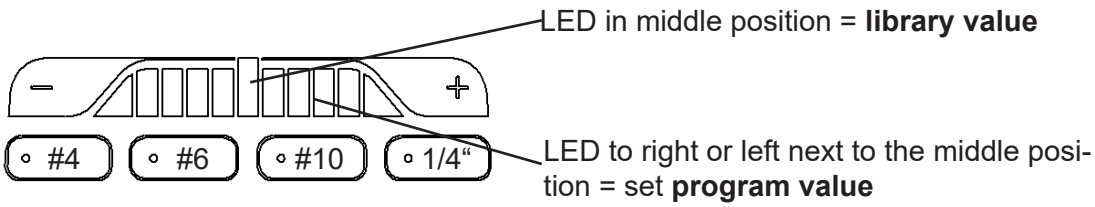

Library value

For the *Pegasar 500 accu*, HBS makes available an extensive library function for various combinations of materials.

The values of the library function are called library values. The library value is a recommendation from HBS that was determined through test welds in accordance with DIN 14555. The library value is always displayed for the respective diameter as an illuminated LED in the middle position.

©HBS Bolzenschweiss-Systeme GmbH & Co. KG

All rights reserved – Reprinting, in whole or in part, only with the approval of the manufacturer

If the illuminated LED is in the middle position after selecting the respective diameter or if it is moved to the middle position using the pushbuttons ([-] **smaller (2)** - [+] **larger (3)**) after selecting the respective diameter, welding is performed according to the welding parameters of the library value.

Program value

In addition to the library function, the Pegasar 500 accu also features a program function.

The values of the program function are called program values. Program values are determined through test welds and differ from the library value.

The program value is displayed for the respective diameter as an illuminated LED to the right or left of the middle position.

Use pushbuttons #4 to 1/4” to load the last-saved program value of the respective diameter. Use the pushbuttons ([-] **smaller (2)** - [+] **larger (3)**) to adapt the program value to the welding task. The last set value is automatically saved after the first weld and is retained as program value after the device is switched off or a different diameter is selected.

All rights reserved – Reprinting, in whole or in part, only with the approval of the manufacturer

8.3 Indicator Lights

	Yellow or red	Charge level of the battery If the left LED (red) illuminates, the battery in the stud welding unit must be charged.
		During charging of the battery, the charging progress is indicated by illumination of the LEDs from left to right (LED line).
	Yellow	**Only when the right LED** lights, the battery is fully charged.
	Yellow	The stud welding unit is connected to mains and the mains switch on the rear of the stud welding unit is switched on. The stud welding unit is switched on with the „On/Off“ button (front side of the unit). The energy for the welding process is drawn from mains. If the charge level of battery is low, the battery is charged.
	Off	The energy for the welding process is drawn from the battery.
	Flashing yellow	The welding capacitors are charging.
	Constant yellow	The welding capacitors are charged.
	Off	The stud welding unit is in sleep mode.
	Yellow	There is electrical contact between the welding element and the workpiece.
	Yellow	Actuation of the welding-gun trigger.
	Red	The internal temperature of the stud welding unit is too high.
	Yellow	The stud welding unit is switched on and ready for welding.

©HBS Bolzenschweiss-Systeme GmbH & Co. KG
All rights reserved – Reprinting, in whole or in part, only with the approval of the manufacturer

8.4 Mains Switch

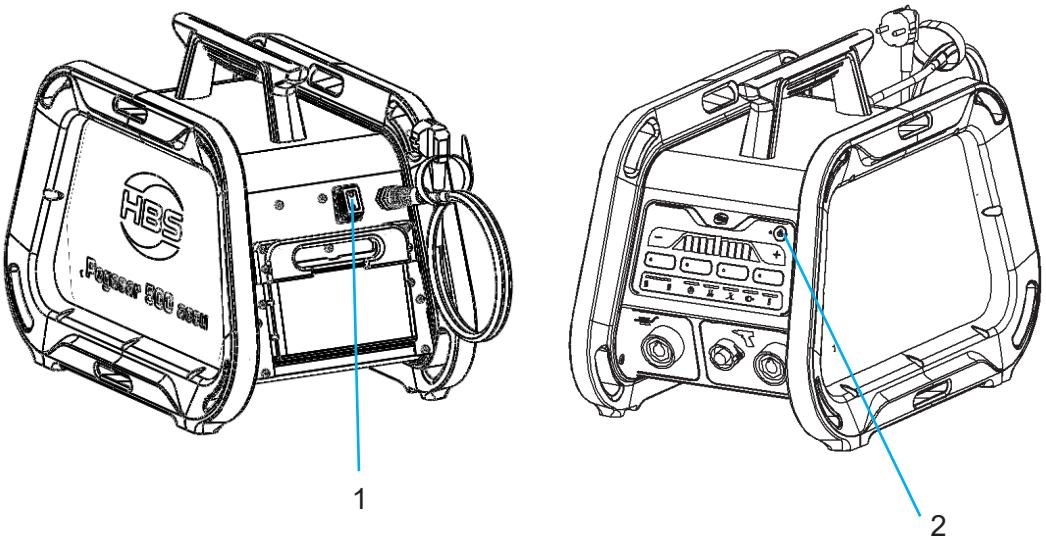

1 - Mains switch

2 - “On/Off” button

The switch for mains mode is located on the rear of the stud welding unit. In switch position "I", the LED for mains mode on the front of the stud welding unit illuminates.

☞ In switch position "0", the welding process can only be started via the battery. The battery is not charged in this switch position.

Use the "On/Off" button to switch on the stud welding unit.

All rights reserved – Reprinting, in whole or in part, only with the approval of the manufacturer

8.5 Securing the Battery

There are two locking options for securing the inserted battery in the Pegasar 500 accu:

Battery in “work position”

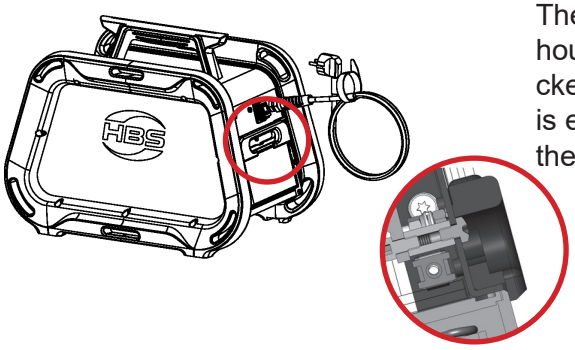

The battery is inserted in the battery support housing to the stop block. The locking clip is locked in place behind the battery. Electrical contact is established between the stud welding unit and the battery.

Securing the battery for changing the place of work

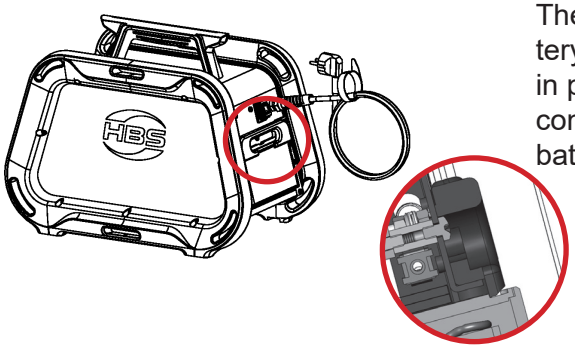

The battery is not completely inserted in the battery support housing. The locking clip is locked in place in the groove on the battery. There is no contact between the stud welding unit and the battery.

Securing the battery for storage, shipment and long transport distances

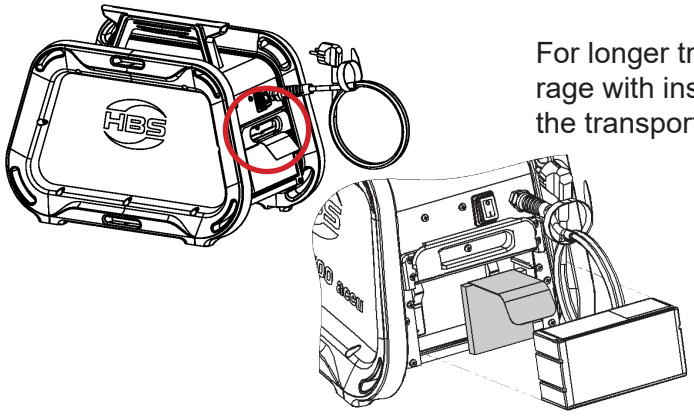

For longer transport distances, shipment and storage with inserted battery, we recommend using the transport protection.

©HBS Bolzenschweiss-Systeme GmbH & Co. KG

All rights reserved – Reprinting, in whole or in part, only with the approval of the manufacturer

9 Welding Process

Stud welding with tip ignition is divided into contact stud welding and gap stud welding. This stud welding unit must be used exclusively for stud welding with contact.

9.1 Contact Stud Welding

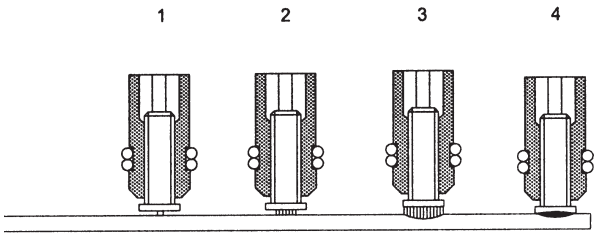

- The stud welding gun is placed onto the workpiece (see figure, **position 1**). The welding element which projects above the welding gun support legs, is pushed back tensioning a pressure spring.
- After positioning the stud welding gun against the workpiece, the operator presses the welding gun trigger and starts the welding process; thus the current circuit is closed.
- The capacitors of the stud welding unit are discharged. Because of the high discharge current, the ignition tip evaporates explosion-like. The air gap between welding element and workpiece is ionized (see figure, **position 2**), an arc is produced.
- The electric arc melts the face of the welding element together with an area of the workpiece of about the same dimension (see figure, **position 3**).
- Caused by the pressure spring, the welding element moves to the workpiece with a speed of 0,5 to 1 m/s. The adjusted spring force controls the plunging speed of the welding element.
- Higher plunging speed leads to shortened arc time and consequently to lower welding energy with identical voltage setting.
- The electric arc is cut as soon as the welding element touches the workpiece.
- Now the capacitors are short-circuited and the rest of the energy drains off (see figure, **position 4**).
- The pressure spring continues to push the welding element into the weld pool.

All rights reserved – Reprinting, in whole or in part, only with the approval of the manufacturer

- The weld pool solidifies and the welding element is physically connected to the workpiece.
- The time period between ignition of the arc and solidification of the weld pool is about 3 ms.
- The use of contact welding for rapidly oxidising materials like aluminium and aluminium alloys is not recommended because the arcing period with contact welding is longer than with gap stud welding.

©HBS Bolzenschweiss-Systeme GmbH & Co. KG

All rights reserved – Reprinting, in whole or in part, only with the approval of the manufacturer

10 Preparing Workplace and Welding Process

Danger from fumes and airborne particulates

- Switch on the welding fume extractor at the workplace.
- Ensure that the room is well ventilated.
- Never weld in rooms with a ceiling height of less than 3 m.
- Observe furthermore your working instructions and the accident prevention regulations.

This will help to avoid health damage due to fumes and airborne particulates.

Danger from fire and explosion

- Remove all inflammable materials and liquids from your working area.
- Ensure that there are no explosive materials in your working area.
- Ensure that an approved fire extinguisher is available at the workplace.

Danger from tripping and falling

- Lay cables and connecting leads in such a way that they are protected against damage and
- that you or third parties cannot trip over them or fall.

Warning of weld spatter

- Ensure that there is no equipment or apparatus in the working area that could be damaged by weld spatter.
- Remove if necessary.

All rights reserved – Reprinting, in whole or in part, only with the approval of the manufacturer

Warning of electromagnetic fields

- Ensure that there is no equipment or apparatus in the working area that could be damaged by magnetic fields.
- Remove if necessary.

Danger!

- Ensure that there is a free circulation of air through the housing of the stud welding unit.
- Always place the stud welding unit on a stable, level and clean surface.
- Check the condition of all cables and cable connections.
- Have defective cables or their connections immediately repaired or replaced by a qualified electrician.

10.1 Preparing Surfaces

- Remove
  - Paint, oil and other impurities,
  - Rust,
  - Non-conductive coatings (of surface-coated materials)

from the welding surface and the contact points of the ground clamps.

This ensures a high strength of the welded joints.

- **Weld the welding element only to a flat surface.**
- Ask your application consultant at HBS about welded joints on tubes and riffle plates (*see page 2*).

©HBS Bolzenschweiss-Systeme GmbH & Co. KG
All rights reserved – Reprinting, in whole or in part, only with the approval of the manufacturer

10.2 Checking the Stud Welding Gun

- Always check the operating manual of your stud welding gun to see whether it may be used with this stud welding unit.

This stud welding unit can only be used with the HBS stud welding gun C 06-3.

- Check the chuck of your stud welding gun for proper fit and ensure it is tightened.
- Check the bellows of your stud welding gun for damage.

- **Refer here to the operating manual of your stud welding gun.**

All rights reserved – Reprinting, in whole or in part, only with the approval of the manufacturer

11 Connection

- **First prepare your workplace.**
- Read and observe here *point 10 "Preparing Workplace and Welding Process"*.

Electric shock hazard

- Leave the stud welding unit switched off during connection of the connecting leads.

In this way you can avoid any unintentional starting of the welding process.

- **Secure the cables.**

Strong magnetic fields are generated during the welding process that can lead to whipping of the cables. This can cause the cables to come out of the plug sockets.

©HBS Bolzenschweiss-Systeme GmbH & Co. KG
All rights reserved – Reprinting, in whole or in part, only with the approval of the manufacturer

11.1 Removing the Transport Protection

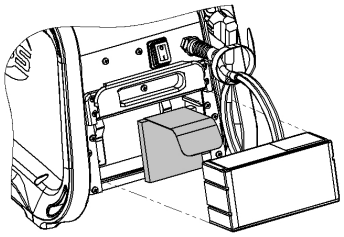

- When delivering with inserted battery, transport protection separates the contacts between the stud welding machine and the battery.
- Carefully pull the lock for the battery compartment upward.
- Pull the battery to the back and out of the battery compartment.
- Remove the transport protection and **keep it**.

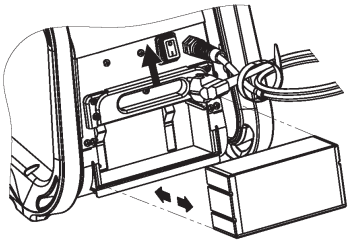

- Insert the battery with the correct orientation (left: double groove, right: groove).
- Push the battery to the stop in the battery compartment.

11.2 Connecting the Stud Welding Gun to the Stud Welding Unit

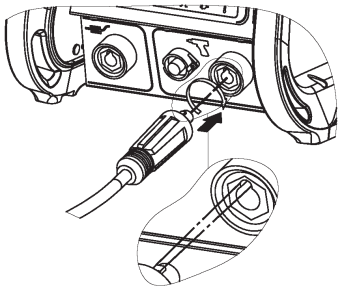

Connect the welding current cable

- Only now plug the welding current cable into the corresponding socket of the stud welding unit.
- Press in the plug and turn it firmly clockwise (to the right).

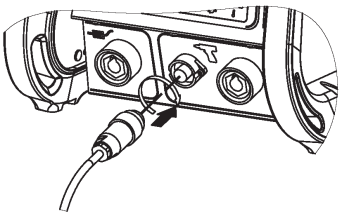

Connect the control cable

- Plug the control cable into the corresponding socket of the stud welding unit.
- Twist the retaining nut of the control cable connector clockwise.

Only loosely made connections will result in damage to the plug connectors.

- Therefore always check that the plug connector is firmly inserted.

This prevents a poor contact and hence overheating of the plug connectors.

All rights reserved – Reprinting, in whole or in part, only with the approval of the manufacturer

11.3 Connecting the Ground Cable

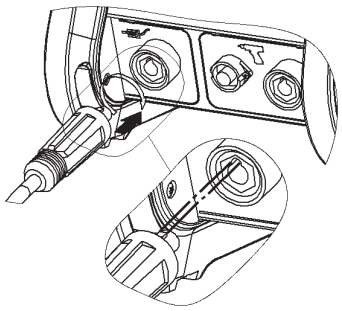

Connect the ground cable

- Plug the ground cable into the corresponding socket of the stud welding unit.
- Press in the plug and turn it firmly clockwise (to the right).

Only loosely made connections will result in damage to the plug connectors.

- Therefore always check that the plug connector is firmly inserted.

This prevents a poor contact and hence overheating of the plug connectors.

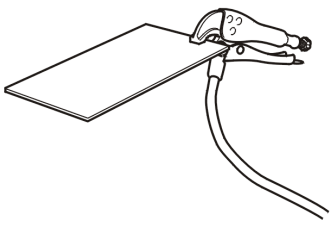

Connect the ground clamp

- Remove rust, paint and dirt from the points on the workpiece to which you wish to connect the ground clamp.
- Attach the ground clamp to the workpiece as tightly as possible.

©HBS Bolzenschweiss-Systeme GmbH & Co. KG

All rights reserved – Reprinting, in whole or in part, only with the approval of the manufacturer

12 Welding

- **First connect up the stud welding unit.**
- Read and observe here *point 11 „Connection“*.

Life-threatening danger for wearers of active implanted cardiac devices

Danger for workers at particular risk within the meaning of the EMF directive

Persons at particular risk within the meaning of the EMF directive are:

– Workers with active implanted medical devices
– Workers with passive implanted medical devices that contain metal
– Workers with medical devices worn on the body
– Pregnant workers.

- Never operate the stud welding machine if you are among the group of workers at particular risk within the meaning of the EMF directive.
- In this case, never remain in the vicinity of the stud welding machine during welding.
- Never operate the stud welding machine if persons are located nearby who are among the group of workers at particular risk within the meaning of the EMF directive.

Strong electromagnetic fields are produced in the vicinity of the stud welding machine during welding. These fields can adversely affect the function of medical devices as well as the course of a pregnancy.

All rights reserved – Reprinting, in whole or in part, only with the approval of the manufacturer

12.1 Switching on the Stud Welding Unit

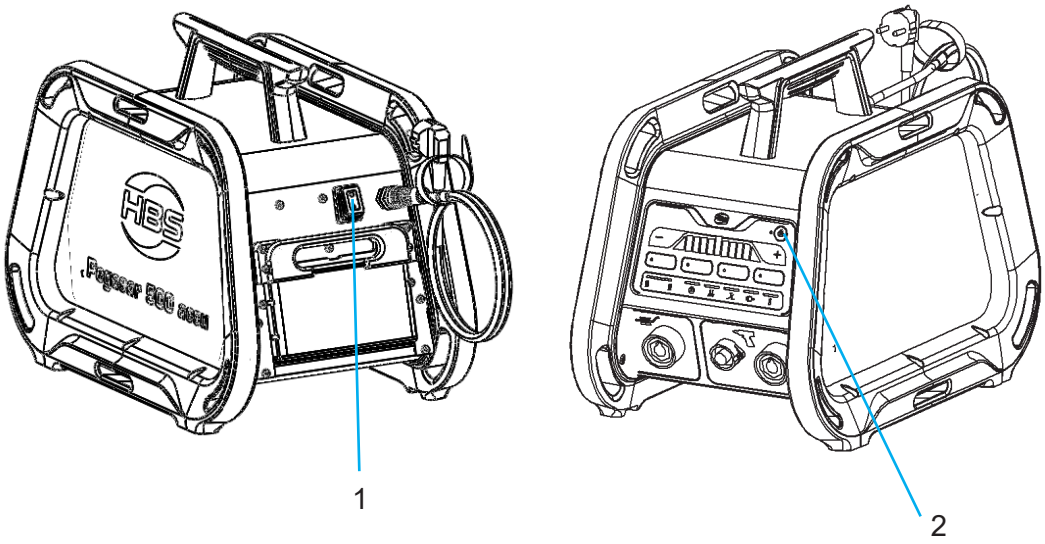

1 - Mains switch

2 - “On/Off” button

Mains mode:

Electric shock hazard

- Have an electrician check whether the plug socket to which you intended to connect the stud welding unit is correctly earthed.
- Connect the stud welding unit only to a primary power supply with the same mains voltage as that indicated on the type plate.
- Compare the current consumption indicated on the type plate with the fuse of your primary power supply.
- Check that the stud welding unit is switched off.

- Only now insert the plug into the plug socket.
- Switch on the stud welding unit with the **mains switch (1)** if you would like to work in mains mode.
- Only now may you switch on the stud welding unit with the **"On/Off" button (2)**.

©HBS Bolzenschweiss-Systeme GmbH & Co. KG
All rights reserved – Reprinting, in whole or in part, only with the approval of the manufacturer

Battery mode:

- Check whether an battery is inserted in the stud welding unit.
- If not, insert an battery in the battery compartment.

Proceed as described below:

- Inspect the high-current contacts on the battery and on the battery compartment for visible damages, such as deformation, soiling or discolouration.

Danger due to damaged contacts

Mechanical damage to battery contacts can cause internal short circuits and thereby lead to fires, explosions and injuries.

- Never work with damaged battery.
- Never work with the stud welding unit if the contacts in the battery compartment are damaged.

- Carefully pull the lock for the battery compartment upward.
- Push the battery to the stop in the battery compartment.

- Insert the battery with the correct orientation (left: double groove, right: groove).

- Release the lock for the battery compartment.
- Check the lock for the battery compartment.

The lock of the battery compartment must have returned to its normal position. The battery is then secured in the battery compartment and the contacts closed.

Danger due to unsuitable batteries

- Only use the battery recommended by HBS in this stud welding unit (see chapter *4 Accessories*).

Unsuitable batteries can lead to injuries and to significant damage to property!

All rights reserved – Reprinting, in whole or in part, only with the approval of the manufacturer

12.2 Determining the Charging Voltage

The setting of the charging voltage on the stud welding unit via the [-] and [+] push-buttons is dependent on, among other things

– Preselection of pushbuttons #4 to 1/4”

– The material of the welding element,

– The diameter of the welding element,

– The material of the workpiece.

◆ Determine the charging voltage to be set at the stud welding unit using the following tables.

☞ **The figures in these table are indicative values and must be checked by means of a test welding on the original material with the same properties as the original workpiece.**

©HBS Bolzenschweiss-Systeme GmbH & Co. KG

All rights reserved – Reprinting, in whole or in part, only with the approval of the manufacturer

Determine the charging voltage for the C 06-3 welding gun

for CD weld studs:

Welding element material	Diameter of welding elements				Charging voltage Pegasar 500 accu
	Metric		Imperial (US)		
	PT, UT	IT	PT, UT	IT	
Workpiece material: non-alloyed steel (suitable for welding)					
4.8 (suitable for welding)	M3, 3 mm	--	1/8“, #4	--	Middle position, pushbutton #4
4.8 (suitable for welding)	M4, 4 mm	--	5/32“, #6	--	Middle position, pushbutton #6
4.8 (suitable for welding)	M5, 5 mm	5 mm, M3	3/16“, #10	--	Middle position, pushbutton #10
4.8 (suitable for welding)	M6, 6 mm	6 mm, M4	1/4“	1/4”, #8-32	Middle position, pushbutton 1/4”
Workpiece material: alloyed steel (suitable for welding)					
A2-50	M3, 3 mm	--	1/8“, #4	--	Middle position, pushbutton #4
A2-50	M4, 4 mm	--	5/32“, #6	--	Middle position, pushbutton #6
A2-50	M5, 5 mm	5 mm, M3	3/16“, #10	--	Middle position, pushbutton #10
A2-50	M6, 6 mm	6 mm, M4	1/4“	1/4”, #8-32	Middle position, pushbutton 1/4”
Workpiece material: aluminium					
AlMg3	M3, 3 mm	--	1/8“, #4	--	Middle position, pushbutton #4
AlMg3	M4, 4 mm	--	5/32“, #6	--	Middle position, pushbutton #6

for CD ground clips (single and double style):

☞ For welding of ground clips (single and double style) we recommend setting the welding parameters for diameter M4.

The library value (LED in middle position) is the value recommended by HBS.

◆ Perform test welds to check the recommended voltage value.

All rights reserved – Reprinting, in whole or in part, only with the approval of the manufacturer

Voltage values of the LED

For documentation purposes, you can ascertain the voltage values as follows:

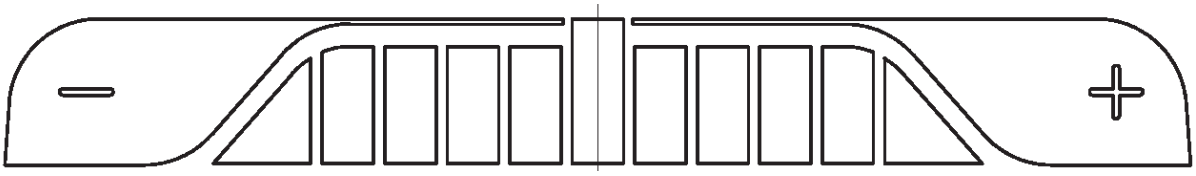

#4	50	51	52	53	54	55	56	57	58	59	60
#6	60	61	62	63	64	65	66	67	68	69	70
#10	70	72	74	76	78	80	82	84	86	88	90
1/4”	90	91	92	93	94	95	96	97	98	99	100
Diameter of welding element	Charging voltage of Pegasar 500 accu in volts										

12.3 Setting the Charging Voltage

◆ Use pushbuttons **#4**, **#6**, **#10** and **1/4”** to set the charging voltage.

©HBS Bolzenschweiss-Systeme GmbH & Co. KG

All rights reserved – Reprinting, in whole or in part, only with the approval of the manufacturer

12.4 Performing the Welding Process

- **First set the necessary charging voltage.**
- Read and observe here *Point 12.3 "Setting the Charging Voltage"*.

Electric shock and light arc hazard

- Never touch the welding elements, chuck, retaining nut or electrically conductive parts in their vicinity during the welding process.

These parts are live.

- Never wear metal jewellery, even a wristwatch, on your body during the welding process.

This will help to avoid injuries and damage due to electric power or electromagnetic fields.

Electric shock and light arc hazard

- Stand on an insulated mat if you have to weld under the following conditions:

– In confined spaces with electrically conductive walls
– Under cramped conditions between or against electrically conductive parts
– Where there is limited mobility on electrically conductive parts
– In damp, wet or hot rooms.

Danger of deflagration of explosive gases and substances

- Never weld in rooms with an explosion hazard.
- Never weld on vessels containing or that have contained substances
  – which are inflammable or promote combustion,
  – which may create health-endangering gases, fumes or airborne particulates,
  – or which could cause explosions.

Such work may only be carried out by welding specialists.

- Do not carry out such work if you have not been specially trained for it.

All rights reserved – Reprinting, in whole or in part, only with the approval of the manufacturer

Risk of fire and burns due to glowing weld spatter

- Wear your personal protective equipment and
- your safety goggles with sight glass of protection class 2.
- Wear a protective helmet when welding over head.
- Remove all inflammable materials and liquids from the vicinity of the place of work before starting welding.
- Ensure that an approved fire extinguisher is available at the place of work.
- Observe furthermore your working instructions and the accident prevention regulations.

Glowing hot weld and liquid spatter occur during welding.

Danger due to noise

- Wear your ear protectors during welding.
- Observe furthermore your working instructions and the accident prevention regulations.
- Inform colleagues working in the immediate vicinity accordingly before starting work.

A loud bang > 90 dB (A) can occur during the welding process.

- Ensure that the stud welding gun has been prepared in accordance with the corresponding operating manual.

- Check whether a welding element has been inserted into the welding gun.
- Insert a welding element, if necessary.

- Place the welding gun perpendicularly onto the workpiece as soon as the stud welding unit is ready for the welding process.
- Press the welding gun firmly with both hands against the workpiece until the welding gun attachment (spacer) is resting uniformly on the workpiece.

©HBS Bolzenschweiss-Systeme GmbH & Co. KG
All rights reserved – Reprinting, in whole or in part, only with the approval of the manufacturer

- Hold the stud welding gun firmly, steady and straight.
- Ensure that you do not touch any metal parts of the stud welding gun.
- Only now should you press the button of the welding gun.

The welding process is started.

- **Always pull the stud welding gun perpendicularly away from the welding element after the welding process**.

If you pull the stud welding gun away at an angle, you will strain the chuck and shorten its service life.

Risk of burns

The welding gun head becomes very hot during the welding process. The same applies to the welded element and the workpiece.

- Wear your personal protective equipment.

Saving the program values

The last set value is automatically saved after the first weld and is retained as program value after the stud welding unit is switched off or a different diameter is selected.

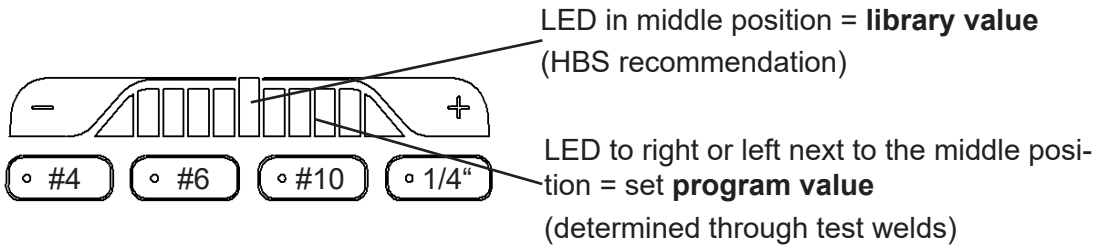

- Check your welding result.
- If necessary, change the charging voltage with pushbuttons [-] and [+].

All rights reserved – Reprinting, in whole or in part, only with the approval of the manufacturer

☞

- **Use only welding elements of one batch.**
- Pay strict attention not to mix welding elements from different batches.
- Carry out test welds again after a batch change.

Even the slightest changes to the geometry, in particular to the tip of the welding elements require different settings for the welding process.

☞

- Now check the quality of the welded joint before inserting a new welding element and repeating the welding process.
- Work in accordance with the following *point 13*.

©HBS Bolzenschweiss-Systeme GmbH & Co. KG

All rights reserved – Reprinting, in whole or in part, only with the approval of the manufacturer

12.5 Charging the Battery

Charging the battery in the stud welding unit

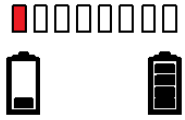

(red LED)

- Charge the battery no later than when the left LED (red) illuminates.
- To recharge the battery, connect the stud welding unit to the primary power supply.

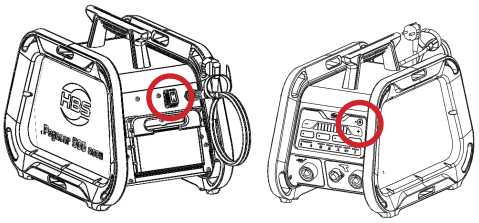

- Switch on the stud welding unit at the mains switch (rear side of the stud welding unit).
- Switch on the stud welding unit at the „On/Off“ button (front side of the unit).

The battery is now charging.

You can track the charging of the battery at the display:

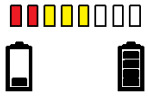

To indicate the battery is charging the LED´s will light **from left to right**.

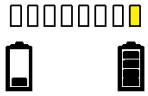

Only when the right LED lights, the battery is fully charged.

All rights reserved – Reprinting, in whole or in part, only with the approval of the manufacturer

Charging the battery in the charging unit

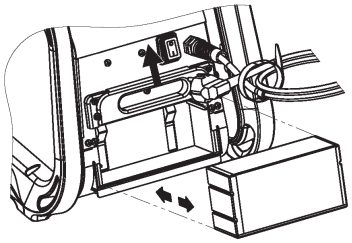

Removing the battery

◆ Carefully pull the lock for the battery compartment upward.

This pushes the battery slightly out of the battery compartment.

◆ Pull the battery to the back and out of the battery compartment.

Danger due to unsuitable chargers

◆ Only charge the battery with a charging unit recommended by HBS! (see chapter *4 Accessories*).

Unsuitable charging units can cause fires!

◆ **Read and observe the operating manual for the charging unit!**

©HBS Bolzenschweiss-Systeme GmbH & Co. KG

All rights reserved – Reprinting, in whole or in part, only with the approval of the manufacturer

12.6 Automatic Shutdown

Automatic shutdown only occurs while operating in battery mode.

No automatic shutdown occurs while operating in mains mode.

Sleep mode

If the stud welding unit is switched on and no welding is performed, sleep mode is started after approx. 10 minutes; internal energy consumption is reduced. The "Ready" LED switches off.

◆ End sleep mode by

– actuating the welding gun start button or

– placing the stud welding gun on the workpiece.

Complete shutdown

After approx. 20 min of non-use, the stud welding unit switches off completely. All LEDs switch off.

◆ End the complete shutdown by switching the stud welding unit back on with the "On/Off" button on the front side.

Shutdown in the case of undertemperature

In both battery mode as well as in mains mode, the battery temperature is determined after the stud welding unit is switched on. If the ascertained value drops below a temperature of 23 °F (-5 °C), the stud welding unit is automatically locked.

The "undertemperature" fault message is indicated as follows:

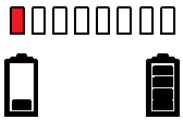

The left red LED flashes twice, then the yellow LED flashes once with the last ascertained charge state.

◆ Store the stud welding unit at a temperature above -5 °C and wait until the fault message switches off.

◆ Store the stud welding unit and the components only under the following ambient conditions.

Storage temperature:

23 °F to 122 °F (-5 °C to +50 °C)

Relative humidity:

0 % - 50 % at 104 °F (+40 °C)
0 % - 90 % at 68 °F (+20 °C)

All rights reserved – Reprinting, in whole or in part, only with the approval of the manufacturer

13 Checking the Quality of the Weld

You can check the quality of the weld by means of a visual inspection and a bending test.

The number and type or method of the tests to be performed and the acceptance criteria are defined in respective standards for quality demands.

13.1 Carrying out Visual Inspection

◆ Carry out a visual inspection on all welding elements.

Visual Inspection			
Condition		Possible cause	Corrective actions
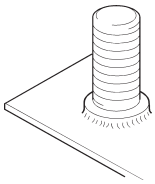	Good welded joint Low spatters around the weld without outer flaws The weld pool forms a collar around the flange of about 1 - 1.5 mm	Correct parameters	none
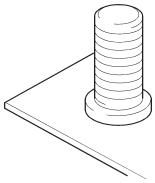	Gap between flange and workpiece	Weld energy too low Plunging speed too low Insufficient support of parent material	Increase weld energy Correct plunging speed Provide support
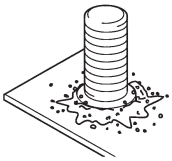	Many spatters around the weld	Weld energy too high Insufficient plunging speed	Reduce weld energy Increase plunging speed
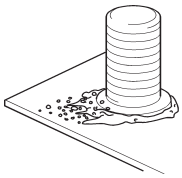	One-sided weld pool One-sided spatter collar Weld pool came out on one side	Effect of arc blow Unsymmetric ground connection Welding gun put at an angle	Take care for symmetrical ground connection Put welding gun vertically to the workpiece

©HBS Bolzenschweiss-Systeme GmbH & Co. KG
All rights reserved – Reprinting, in whole or in part, only with the approval of the manufacturer

13.2 Carrying out Bending Test

You can purchase from HBS a bending device with inserts for various diameters of the welding elements.

The bending test serves as an easy work sample and as a check for the selected welding parameters. The welded joint is stressed by bending in a non-defined way.

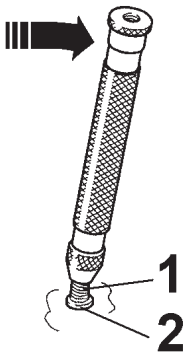

1 - Welding element

2 - Welded joint

◆ Place the bending device on the **welding element (1)** and

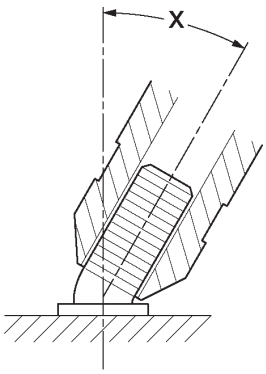

◆ bend the **welding element (1)** with the bending device once by 30° in any direction.

The bending test is passed if a crack or a fracture of the welded zone does not occur.

☞

◆ **Further tests should be conducted if the connection fails in the weld area.**

◆ In this case, **bend** the welding element exactly in the opposite direction by 30° towards the failing seam.

All rights reserved – Reprinting, in whole or in part, only with the approval of the manufacturer

◆ You don’t need to test all studs.

It is sufficient to carry out stud tests on several production samples that are picked at random.

Bending Test			
Type of fracture		Possible cause	Corrective actions
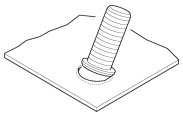	Base material buckling	Correct parameters	none
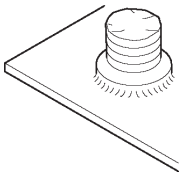	Fracture in welding element above flange	Correct parameters	none
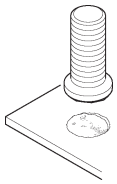	Fracture in the weld metal	Weld energy too low Plunging speed too low Unsuitable stud/base material combination	Increase weld energy Increase plunging speed Replace welding element or workpiece

If the strength of the joint is inadequate, then:

◆ check the setting of the stud welding unit.

◆ check whether the surface of welding element and base material are clean and electrically conductive.

They must be free from scale, oil, paint, oxide layers.

◆ Grind off hardened workpiece surfaces (e.g. roll hardening).

◆ Check the piston of the welding gun for ease of movement.

13.3 Optimisation of Welding Parameters

◆ **As first step, conduct the tests outlined under points 13.1 and 13.2.**

◆ As second step optimise the welding parameters of your stud welding unit.

©HBS Bolzenschweiss-Systeme GmbH & Co. KG

All rights reserved – Reprinting, in whole or in part, only with the approval of the manufacturer

13.4 Blowing Effect and Remedies

With asymmetric ground connections, different material distributions or when welding at the edge of a workpiece a "blowing effect" can occur. This is an undesirable deflection of the electric arc. This results in uneven melting of the stud material, in increased poring and undercuts in the welding area.

The blowing effect is proportional to the current amperage and can be influenced by symmetrical connection of the ground terminals, by connecting compensating grounds or (on welding guns with external welding cable) by turning the welding gun about its vertical axis.

Blowing effect	
Cause	Remedy
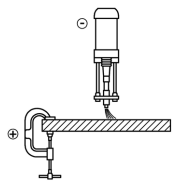	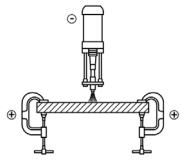
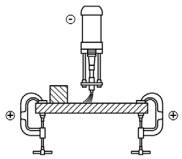	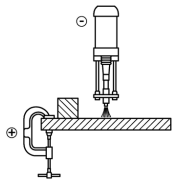
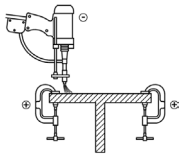	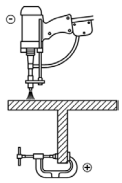

All rights reserved – Reprinting, in whole or in part, only with the approval of the manufacturer

14 Troubleshooting

Danger from insufficiently qualified operating personnel

- Carry out only the work described here on your stud welding unit or stud welding gun.
- Repairs may only be carried out by appropriately qualified personnel.
- Inform your dealer or your maintenance department.

Fault	Possible cause	Fault localisation	Fault remedy	Performance
The mains control lights in the mains switch do not illuminate	Mains connection socket defective	Check mains connection socket*)	Replace mains connection socket*)	Qualified specialists
	Interruption in mains cable	Check mains cable*)	Replace mains cable*)	Qualified specialists
No LED indicator on the front side	Line interruption	Check lines*)	Replace lines*)	Qualified specialists
No display	No ground connection	Check ground connection at the workpiece	Properly secure the ground connection	Trained personnel
	Stud welding gun not connected	Check gun connection	Connect the stud welding gun correctly	Trained personnel
	Contact resistance (between studs and workpiece) too high	Check workpiece surface	Clean or sand down workpiece surface	Trained personnel
	Cable breakage - ground	Check ground cable*)	Replace ground cable*)	Qualified specialists
	Cable breakage at stud welding gun	Check welding gun cable*)	Replace welding gun cable*)	Qualified specialists
No display	Fault in connecting line of the stud welding gun	Check function of the connecting line*)	Replace connecting line*)	Qualified specialists
	Welding-gun start button defective	Check control cable for continuity with the push-button pressed*)	Replace welding-gun start button*)	Qualified specialists
	Cable breakage in the control line	Check control cable for continuity*)	Replace control cable*)	Qualified specialists
No display	Stud welding machine in sleep mode	End sleep mode	Press welding gun start button or place stud welding gun on workpiece	Trained personnel

©HBS Bolzenschweiss-Systeme GmbH & Co. KG
All rights reserved – Reprinting, in whole or in part, only with the approval of the manufacturer

Fault	Possible cause	Fault localisation	Fault remedy	Performance
LED illuminates red	Stud welding unit over-heated	---	Allow stud welding unit to cool down while switched on	Trained personnel
Charge level LEDs flash (2 x red, 1 x yellow)	Battery too cold	---	Store stud welding unit at temperature above -5 °C	Trained personnel
Welding in battery mode not possible	Transport protection in the welding unit not removed	---	Remove transport protection	Trained personnel
	No contact between the battery and stud welding unit	Battery not inserted correctly	Insert the battery into the stud welding unit until lock goes into its start position	Trained personnel
	Battery empty	Check charge level	Charge the battery	Trained personnel
	Battery defective	Check battery for external damage, check charge level	Replace battery	Trained personnel

Work marked with *) may only be carried out by qualified electricians!

- Please contact our Service department if none of the measures described remedies the situation.
- Please use the form „Service & Support“ in the annex to send in the stud welding unit.

All rights reserved – Reprinting, in whole or in part, only with the approval of the manufacturer

15 Shutting Down

- Switch off the stud welding unit.
- Pull out the mains plug.
- Disconnect the control cable and welding cables from the stud welding unit.
- Protect the stud welding unit and its components against the ingress of liquids and foreign matter.
- If not used for a longer period of time, remove the battery.

Special storage instructions for lithium-ion batteries

Danger due to improper storage

- Do not expose your battery to high temperatures or fire.

Contact with fire or temperatures in excess of 130 °C (265 °F) can cause explosions!

- Store your battery in a cool and dry place.

(Defective) lithium cells react violently with water, particularly when fully charged.

- Store your battery separately from other metallic objects, such as paper clips, coins, keys, nails, screws or other small metal objects, that could lead to bridging of the contacts.

A short circuit between the battery contacts can cause burns or a fire.

©HBS Bolzenschweiss-Systeme GmbH & Co. KG
All rights reserved – Reprinting, in whole or in part, only with the approval of the manufacturer

16 Maintenance and Care

Electric shock hazard

- Always switch off the stud welding unit before starting maintenance and care work.
- Pull out the mains plug.

Danger from insufficiently qualified operating personnel

- Carry out only the work described here on your stud welding unit.
- Repairs may only be carried out by appropriately qualified personnel.
- Inform your dealer or your maintenance department.

16.1 Cleaning

- Clean the surface of the stud welding unit with a slightly damp cloth, when necessary.
- Add a little household detergent to the cleaning water.

- **Do not use solvents for cleaning.**

  These can damage the surface of your stud welding unit.

©HBS Bolzenschweiss-Systeme GmbH & Co. KG

All rights reserved – Reprinting, in whole or in part, only with the approval of the manufacturer

16.2 Inspection and Tests

- **Inspect the condition of the mains cable.**
- Inform your dealer or maintenance department if you discover any damage.

- Check whether the readings on the display of the stud welding unit are still legible before starting work.
- Clean display and control panel in the event of soiling.

- Replace any removed or damaged signs:

Before opening machine disconnect mains.

Observe the operating manual

Warning of electric shock hazard

We recommend that the stud welding unit be subjected to an annual periodic inspection in compliance with the standard IEC 60974-4 “Periodic inspection and testing”.

Please contact your customer advisor for further information.

16.3 Replacing the Battery

- **Observe the safety precautions in chapter 1.**

Electric shock hazard

- Never replace the battery if the stud welding unit is connected to the primary power supply.
- First unplug the mains plug.
- Switch off the stud welding unit at the mains switch.

©HBS Bolzenschweiss-Systeme GmbH & Co. KG
All rights reserved – Reprinting, in whole or in part, only with the approval of the manufacturer

Removing the battery

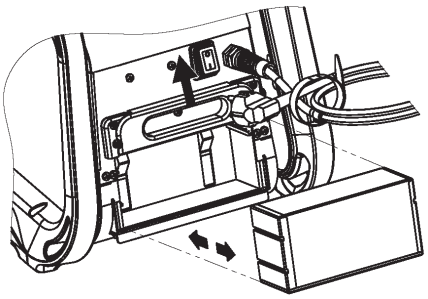

- Carefully pull the lock for the battery compartment upward.

This pushes the battery slightly out of the battery compartment.

- Pull the battery to the back and out of the battery compartment.
- Replace the battery.

Inserting the battery

- Inspect the high-current contacts on the battery and on the battery compartment for visible damages, such as deformation, soiling or discolouration.
- Carefully pull the lock for the battery compartment upward.
- Push the battery to the stop in the battery compartment.

STOP

- Insert the battery with the correct orientation (left: double groove, right: groove).

- Release the lock for the battery compartment.
- Check the lock for the battery compartment.

The lock of the battery compartment must have returned to its normal position. The battery is then secured in the battery compartment and the contacts closed.

Danger due to unsuitable batteries

- Only use the battery recommended by HBS in this stud welding unit (see chapter *4 Accessories)*.

Unsuitable batteries can lead to injuries and to significant damage to property!

All rights reserved – Reprinting, in whole or in part, only with the approval of the manufacturer

17 Storage

◆ Store the stud welding unit and the components in a safe and dust-free location when not in use.

Cable wrap system:

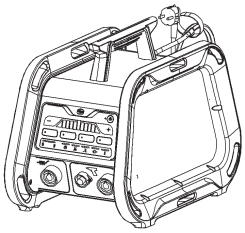

◆ Use the handle to securely wrap the cable.

The cable can then not slip during transport and storage.

◆ Make sure that no cables are kinked!

◆ Protect the stud welding unit from moisture and metallic contamination.

◆ Store the stud welding unit and the components only under the following ambient conditions.

Storage temperature:

23 °F to 122 °F (-5 °C to +50 °C)

Relative humidity:

0 % - 50 % at 104 °F (+40 °C)
0 % - 90 % at 68 °F (+20 °C)

©HBS Bolzenschweiss-Systeme GmbH & Co. KG

All rights reserved – Reprinting, in whole or in part, only with the approval of the manufacturer

Special storage instructions for lithium-ion batteries

Danger due to improper storage

- Do not expose your battery to high temperatures or fire.

Contact with fire or temperatures in excess of 265 °F (130 °C) can cause explosions!

- Store your battery in a cool and dry place.

(Defective) lithium cells react violently with water, particularly when fully charged.

- Store your battery separately from other metallic objects, such as paper clips, coins, keys, nails, screws or other small metal objects, that could lead to bridging of the contacts.

A short circuit between the battery contacts can cause burns or a fire.

We recommend storing the stud welding machine **with inserted battery**.

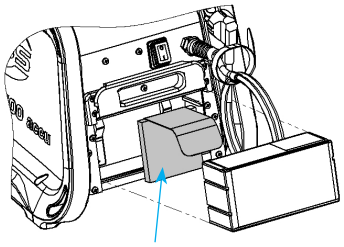

- Remove the battery.
- Now insert the transport protection.

The transport protection separates the contacts between the stud welding unit and the battery and thereby prevents unintentional start-up of the stud welding unit.

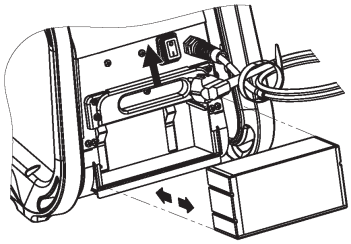

- Insert the battery with the correct orientation (left: double groove, right: groove).
- Insert the battery and lock the battery compartment.

All rights reserved – Reprinting, in whole or in part, only with the approval of the manufacturer

18 Disposal

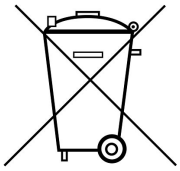

- Dispose of the stud welding unit only via the manufacturer or a specialist disposal company.
- Never dispose of the stud welding unit in the domestic refuse.

Special disposal instructions for lithium-ion batteries

Danger from toxic substances

Batteries contain toxic substances.

- Never dispose of the battery in the domestic refuse.
- Affix electrical tape to the battery pack to prevent an accidental short circuit.

19 Returns

- Please use the form „Service & Support“ in the annex to send in the stud welding unit.
- Send in the **stud welding unit without the battery**.

Due to its nature, the Accu 150 battery is classified as dangerous goods.

- Observe the applicable regulations when shipping used batteries.

©HBS Bolzenschweiss-Systeme GmbH & Co. KG
All rights reserved – Reprinting, in whole or in part, only with the approval of the manufacturer

Service & Support

With the return please attach a copy of the filled out form together with the repair number given by HBS! Repairs without repair number will not be processed.

Repair number
(given by HBS)

_____

Company: _____
Name / Surname: _____
Street: _____
City, State and ZIP/Postcode: _____
Country: _____
Phone & Fax: _____
E-mail address: _____

Stud welding unit / stud welding gun type of model: _____
Serial number: _____
Date of purchase: _____
Purchased at distributor: _____

Detailed descriptions of errors: _____

Service & Support may be done up to the value of EUR _____ without quotation: ☐ Yes ☐ No

Could you find any damage / burn marks

on the cables: ☐ Yes ☐ No

on chucks: ☐ Yes ☐ No

Are all plug and screw connections tightly fastened *: ☐ Yes ☐ No

Are there any burn marks on plug or screw connections: ☐ Yes ☐ No

Is there any other visual damage (e.g. cracks, dents): ☐ Yes ☐ No

Have you checked the fuses: ☐ Yes ☐ No

Default on the display of the stud welding unit:

ARC / IT					CD / CDM / SC					
○	⊗				●		⊗			**

Which LED´s are illuminated (please mark with a cross)?

Please e-mail or fax this form to service@hbs-info.de or fax: +49 8131 511-100.
In case a repair is necessary a repair number will be given!

* See also operating manual chapter „Connection“
** Doesn´t light when using a contact welding gun

All rights reserved – Reprinting, in whole or in part, only with the approval of the manufacturer

Index

A

accessories 15
airborne particulates 7, 31
automatic welding head. 13

B

bang. 8, 44
basic configuration. 14
batch 46
battery mode 39
bending device with inserts 51
bending test. 51
blowing effect. 53

C

capacitor 13, 29
charging the battery. 47
charging voltage 41
checking the quality. 50
cleaning 57
clothing, non-flammable 8
contact stud welding 29
control cable 35
control system 22

D

danger from incorrect use 6, 9
disposal 62

E

ear protection. 11
electrical hazards. 11
electric arc 13, 29
electromagnetic fields 11
EMF directive, safety notices. 10

F

fire extinguisher 8, 44
fire extinguisher, approved 31
fire hazard 8
form „Service & Support“. 55, 62, 63
full-ear hearing protection 8
fumes, harmful to health 7, 31
fuse 38

G

gap stud welding 30
glossary 13
goggles with visor 8
ground cable 36

H

hazards for the machine 11
hazards for the operator 11
heart pacemaker 7, 11, 37
helmet 8

I

ignition tip 29
indicator lights 26
intended use 19, 33

L

library value 24, 45
liquids, inflammable. 31

M

main assemblies 22
mains mode. 38
mains switch 27
mains voltage 38
maintenance and care. 57
maintenance and care, regular 57
materials, inflammable. 31

O

„On/Off“ button. 27, 38
operating manual. 14
operation panel and display. 24
oxidizing materials. 30

P

plunging speed 29
power supply unit. 22
primary power supply 38
program value 24, 45
protective apron. 8
protective equipment. 8
protective equipment, personal 11
protective gloves 8

R

rectifier. 13
replacing the battery 58
risk of burns. 44
risk of falling. 31
risk of fire. 44
risk of tripping 31

©HBS Bolzenschweiss-Systeme GmbH & Co. KG

All rights reserved – Reprinting, in whole or in part, only with the approval of the manufacturer

S

safety goggles 11
safety goggles with sight glass 8
safety precautions 6
scope of supply 14
setting the charging voltage. 40, 42
shutdown 56
shutdown, automatic 49
shutdown in case of undertemperature . . 49
sleep mode 49
spacer 44
storage. 60
storage temperature 49, 60
stud feeder. 13
stud welding gun 13, 16
stud welding system 13
stud welding unit 13
substances, explosive 31
surface of base material 52
surface of welding element 52
switching on the stud welding unit. 38
symbols used. 11

T

test welding 40
transport protection 14, 21, 61
troubleshooting 54
type plate. 23, 38

V

vessels, welding work on. 43
visual inspection 50

W

warranty entitlement 20
welding capacitors. 22
welding current cable. 35
welding element. 13
welding energy 29
welding gun attachment. 44
welding parameters 13
welding process. 29
welding thyristor. 22
workpiece 13

All rights reserved – Reprinting, in whole or in part, only with the approval of the manufacturer

©HBS Bolzenschweiss-Systeme GmbH & Co. KG
All rights reserved – Reprinting, in whole or in part, only with the approval of the manufacturer

HBS Bolzenschweiss-Systeme GmbH & Co. KG
Felix-Wankel-Strasse 18 • 85221 DACHAU • GERMANY
Phone +49 8131 511-0 • E-mail sales@hbswelding.systems

www.hbswelding.systems