CDMi 3202

Stud Welding Unit

92-12-23212

HBS EFFICIENT TECHNOLOGY

Operating Manual

2025

After-sales service for Germany:

HBS Welding Systems GmbH
Felix-Wankel-Strasse 18
85221 DACHAU
GERMANY

Phone **+49 8131 511-0**
E-mail **sales@hbswelding.systems**
Web **www.hbswelding.systems**

CDMi 3202 Operating Manual Issue 2025-04 Order No. US-BA 92-12-23212

Translation of the Original Operating Manual

Please keep the manual in a safe place for future reference.

Transmission and duplication of this document, dissemination and notification of the contents are not permitted unless expressly approved.

All rights, errors and technical amendments reserved.

© HBS Welding Systems GmbH

Dear Customer,

Many thanks for buying a stud welding machine from HBS Welding Systems.

We at HBS wish you success at all times when working with this stud welding machine.

The high level of quality of our products is guaranteed by ongoing further development in the design, equipment and accessories. This may result in differences between the present operating manual and your product. No claims can therefore be derived from the data, illustrations and descriptions.

We have compiled the data and information in this reference work with the greatest care, and have made every effort to ensure that the information contained in this manual was correct and up-to-date at the time of delivery. We can nevertheless give no guarantee for an absolutely error-free document.

Should you discover any errors or unclear points when reading this operating manual, please do not hesitate to contact us.

We would also be grateful for any feedback should you have any suggestions or complaints to make about our product.

HBS Welding Systems GmbH

Felix-Wankel-Strasse 18

85221 Dachau

GERMANY

All rights reserved – Reprinting, in whole or in part, only with the approval of the manufacturer

©HBS Welding Systems GmbH

All rights reserved – Reprinting, in whole or in part, only with the approval of the manufacturer

Table of Contents

1 Important Safety Precautions 8

2 Symbols and Terms Used 12

3 Scope of Supply 15

4 Accessories 15

5 Technical Data 16

6 Intended Use 17

7 Warranty 18

8 Components of the Stud Welding Unit 19

8.1 Main Assemblies 19
8.2 Control Panel and Display 21
8.3 Symbols and Indicators in the Display 23

9 Welding Process 25

9.1 Contact Stud Welding 25
9.2 Gap Stud Welding 27

10 Preparing Workplace and Welding Process 28

10.1 Preparing Surfaces 29
10.2 Checking the Stud Welding Gun 30
10.3 Checking the Stud Welding Head 30
10.4 Checking the Automatic Stud Feeder 30

11 Connection 31

11.1 Connecting the Welding Gun to the Stud Welding Unit 32
11.2 Connecting the Welding Head to the Stud Welding Unit 32
11.3 Connecting the Adaptor 33

All rights reserved – Reprinting, in whole or in part, only with the approval of the manufacturer

11.4 Connecting the Fully Automatic Stud Feeder to the Stud Welding Unit 33
11.5 Compressed Air Connection 34
11.6 Connecting the Ground Cable 36
11.7 Connecting the Stud Welding Unit to the Mains Supply 37
11.8 Integrating the Stud Welding Unit into a CNC System 38
11.8.1 VBZ-3 40
11.8.2 Control System 40
11.8.3 Remote Control 42
11.8.4 Read Out 42

12 Welding 43

12.1 Switching on the Stud Welding Unit 44
12.2 Determining the Charging Voltage 44
12.3 Setting Options 48
12.3.1 Simplified Language Setting 50
12.3.2 Setting Charging Voltage 51
12.3.3 Setting Capacity 52
12.3.4 Selecting Programmes 53
12.3.5 Setting Stud Feeding Time (Automatic) 54
12.3.6 Calling up Library 55
12.3.7 Setup CP 57
Mode Ref: Determine reference value 59
Mode Input: Enter reference value 62
12.3.8 Setup User 66
12.4 Service Settings 71
12.4.1 Service 71
12.4.2 Gun Test 72
12.5 Performing the Welding Process 73

13 Checking the Quality of the Weld 77

13.1 Carrying out Visual Inspection 77
13.2 Carrying out Bending Test 78
13.3 Optimisation of Welding Parameters 80
13.4 Blowing Effect and Remedies 81
13.5 Analysis of Parameters via RS 232 Interface 82
13.6 Remote Control via RS 232 Interface 89

14 Troubleshooting 92

©HBS Welding Systems GmbH

All rights reserved – Reprinting, in whole or in part, only with the approval of the manufacturer

15 Shutting Down 95

16 Maintenance and Care 96

16.1 Cleaning 96

16.2 Inspection and Tests 97

17 Storage 98

18 Disposal 98

Service & Support 99

Index 100

All rights reserved – Reprinting, in whole or in part, only with the approval of the manufacturer

1 Important Safety Precautions

The target group for this manual are qualified personnel who in view of their technical training, know-how and experience and knowledge of applicable regulations are able to assess the work assigned to them and recognise potential hazards.

Danger from incorrect use

- Use the stud welding machine only for the purpose described in this manual.

Otherwise you may endanger yourself or damage the stud welding machine.

You endanger yourself and others if you operate the stud welding machine incorrectly or fail to observe the safety precautions and warnings. This can lead to serious injury or extensive material damage.

Danger for unauthorised operating personnel

- Work with the stud welding machine only when
  - You are appropriately trained, instructed and authorised to do so, and
  - You have read and completely understood this operating manual.
- Never work with the stud welding machine when you are under the influence of
  - Alcohol,
  - Drugs or
  - Medication.

Danger from unauthorised modifications

- Never modify the stud welding machine or parts thereof without obtaining a clearance certificate from the manufacturer.

You will otherwise endanger yourself. This can lead to serious injury or extensive material damage.

©HBS Welding Systems GmbH

All rights reserved – Reprinting, in whole or in part, only with the approval of the manufacturer

Life-threatening danger for wearers of active implanted cardiac devices

Danger for workers at particular risk within the meaning of the EMF directive

Persons at particular risk within the meaning of the EMF directive are:

– Workers with active implanted medical devices
– Workers with passive implanted medical devices that contain metal
– Workers with medical devices worn on the body
– Pregnant workers.

◆ Never operate the stud welding machine if you are among the group of workers at particular risk within the meaning of the EMF directive.
◆ In this case, never remain in the vicinity of the stud welding machine during welding.
◆ Never operate the stud welding machine if persons are located nearby who are among the group of workers at particular risk within the meaning of the EMF directive.

Strong electromagnetic fields are produced in the vicinity of the stud welding machine during welding. These fields can adversely affect the function of medical devices as well as the course of a pregnancy.

Danger from fumes and airborne particulates

◆ Switch on the welding fume extractor at the place of work.
◆ Ensure that the room is well ventilated.
◆ Never weld in rooms with a ceiling height of less than 3 m.
◆ Observe furthermore your working instructions and the accident prevention regulations.

This will help to avoid health damage due to fumes and airborne particulates.

All rights reserved – Reprinting, in whole or in part, only with the approval of the manufacturer

Danger from glowing metal spatter (fire hazard)

Glowing hot weld spatter and liquid splashes, flashes of light and a loud bang > 90 dB (A) must be anticipated during stud welding.

- Inform colleagues working in the immediate vicinity accordingly before starting work.
- Ensure that an approved fire extinguisher is available at the workplace.
- Do not weld when wearing working clothes soiled with flammable substances such as oil, grease, petroleum, etc.
- Wear your proper protective equipment, such as:
  - Protective gloves in accordance with the relevant standard,
  - Non-flammable clothing,
  - A protective apron over your clothing,
  - Full-ear hearing protection in accordance with the relevant standard,
  - A safety helmet when welding above your head,
  - Safety shoes,
  - Safety goggles with sight glass of protection level 2 in compliance with the applicable standards and do not look directly into the electric arc.
- Remove all flammable materials and liquids from the vicinity of the work area before starting welding.
- Weld at a safe distance from flammable materials or liquids. Select a safety distance large enough to ensure that no danger can arise from weld spatter.

Protection of the stud welding unit

- Protect the stud welding machine against the ingress of foreign matter and liquids caused by cutting or grinding work in the vicinity of your work area.

This will help to prolong the service life of your stud welding machine.

©HBS Welding Systems GmbH

All rights reserved – Reprinting, in whole or in part, only with the approval of the manufacturer

Safety notices in accordance with EMF directive 2013/35/EU

Currents flowing through electrical conductors during stud welding cause electric and magnetic fields that can occur, in particular, near the hand-held welding guns, the welding arrangement (e.g., welding cables) and the welding power sources.

Due to the high currents, high EMF exposures may occur.

Danger for workers at particular risk within the meaning of the EMF directive

Persons at particular risk within the meaning of the EMF directive are:

- Workers with active implanted medical devices
- Workers with passive implanted medical devices that contain metal
- Workers with medical devices worn on the body
- Pregnant workers.

Strong electromagnetic fields are produced in the vicinity of the stud welding machine during welding.

To reduce the danger posed by electromagnetic fields, we recommend, among other things, the following rules of conduct:

◆ Lay all cables as close together as possible.

For proper bundling and safeguarding of the cables, HBS offers protective tubes in various sizes.

◆ Do not position yourself between the welding cables.

◆ Only lay the cables to one side and position them as far as possible from the operating personnel.

◆ Do not loop the cables over your body, especially not at head level.

◆ Completely unwind the welding cables.

◆ Use the shortest possible welding cables.

◆ Place portable welding power sources as far away as possible while welding.

◆ If possible, do not operate welding power sources in the immediate vicinity of other persons, do not sit directly next to the welding power source while working and do not lean against it.

◆ In addition to these safety notices, also observe your work instructions and accident prevention regulations.

All rights reserved – Reprinting, in whole or in part, only with the approval of the manufacturer

2 Symbols and Terms Used

The symbols used in this operating manual have the following meanings:

Danger

Warns you of hazards that can lead to **injury of persons** or to **considerable material damage.**

Caution

Problems in operating **may occur** if this information **is not observed.**

No access for people with active implanted cardiac devices

No access for persons with implants made of metal

No access for pregnant women

Danger

Warns you of **electrical** hazards

Danger

Warns you of **electromagnetic fields** that can be generated during welding

These symbols prompt you to wear **personal protective equipment when working with the stud welding unit**.

This symbol prompts you to wear **ear protection**. **A loud bang > 90 dB (A) can occur during the welding process.**

©HBS Welding Systems GmbH

All rights reserved – Reprinting, in whole or in part, only with the approval of the manufacturer

☞ **Tip**

Cross-reference to **useful information** on the use of the stud welding machine

Cross-references in this operating manual are marked with this symbol or ***are printed in italics***

Fire hazard

Have a suitable fire extinguisher for the working area ready before starting work.

◆ **Work instruction**

– **List**

All rights reserved – Reprinting, in whole or in part, only with the approval of the manufacturer

Glossary

Automatic welding head:	Device for welding of welding elements
Capacitor:	Component for storage of electrical energy.
Electric arc:	Autonomous gas discharge between two electrodes when the current is high enough. A whitish light is emitted in the process. The electric arc allows very high temperatures to be generated.
Rectifier:	Electrical component that converts alternating voltage into direct voltage
Stud feeder:	Device for automatic feeding of welding elements
Stud welding gun:	Device for welding of welding elements
Stud welding system:	Stud welding unit including stud welding gun or welding head
Stud welding unit:	Device for provision of the electrical energy for stud welding
Thyristor:	Electronic component for contact-free switching of high currents; switching takes place via the control input
Welding element:	Component such as stud or pin that is welded to the workpiece
Welding parameters:	Mechanical and electrical settings at the stud welding gun or welding head and at the stud welding unit (e.g. spring force, charging voltage)
Workpiece:	Components such as sheet metal or tubes to which the welding elements are to be fastened

©HBS Welding Systems GmbH

All rights reserved – Reprinting, in whole or in part, only with the approval of the manufacturer

3 Scope of Supply

The **basic configuration** of your stud welding unit contains the following parts:

No. of pieces	Part	Type	Order No.
1	Stud welding unit	CDMi 3202	92-12-23212B
	Adaptor	CDMi-I/O interface Contact/CP/Ready/VBZ	80-70-490A
1	Operating manual	CDMi 3202	US-BA 92-12-23212B

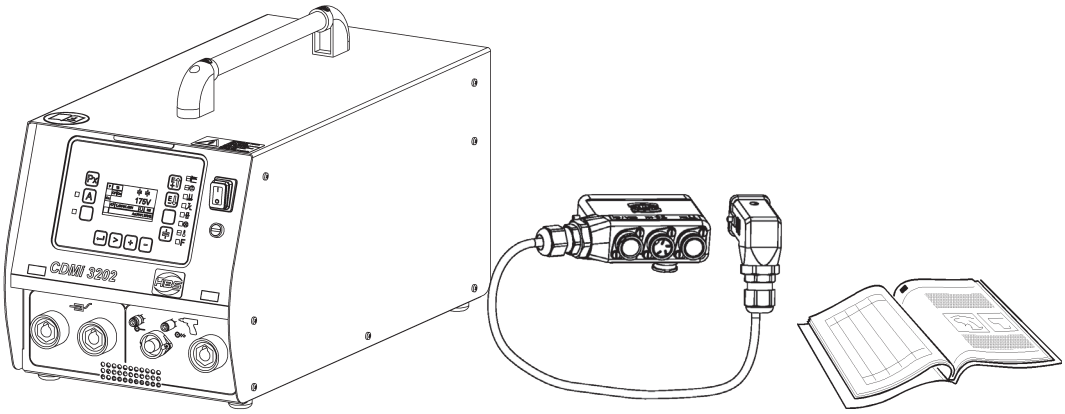

- Inspect the shipment for visible damage and completeness immediately on receipt.
- Report any transport damage or missing components immediately to the delivering shipping agent or the dealer (address, see page 2).

4 Accessories

The following ground cables are available as **accessories**:

No. of pieces	Part	Type	Order No.
1	Ground cable for	C 08, CA 08, PAH-1 2.5 m, 25 mm²	92-40-095
1	Data cable		80-50-1243

All rights reserved – Reprinting, in whole or in part, only with the approval of the manufacturer

5 Technical Data

Stud Welding Unit CDMi 3202

for CD stud welding (capacitor discharge welding) according to current standards

Welding range	#4 to 7/16“, dia. 14 ga to 3/8“ (M3 to M10, dia. 2 to 10 mm)
Welding material	Mild steel, stainless steel, aluminum and brass
Welding rate	M3 = 43 studs/min. (Charging voltage 50 V) M8 = 25 studs/min. (Charging voltage 140 V) M10 = 18 studs/min (Charging voltage 200 V)
Capacitance	132 000 µF/66 000 µF *
Welding time	1 to 3 ms
Energy	3 200 Ws/1 600 Ws *
Charging voltage	50 to 220 V (stepless voltage regulation)
Primary power	115 V (pluggable to 230 V[1)]), 50/60 Hz, 10 AT [1)] Contact your service department or dealer for assistance.
Power source	Capacitor
Cooling type	F (temperature controlled cooling fan)
IP Code	IP 21 (not allowed to use while raining)
Ambient temperature limits	32 °F to 104 °F (0 °C to 40 °C)
Dimension L x W x H	22.44“ x 11.22“ x 11.42“ (570 x 285 x 290 mm) without handle
Weight	59.52 lbs (27 kg)

* with change over of capacitors

©HBS Welding Systems GmbH

All rights reserved – Reprinting, in whole or in part, only with the approval of the manufacturer

6 Intended Use

Our stud welding units are designed and built exclusively for industrial use. Nonindustrial use is expressly forbidden due to the lack of know-how about the welding technology employed and the applicable standards.

The stud welding unit is intended exclusively for stud welding of standardised welding elements. Any other use will result in the desired strength of the welded joint being reduced.

This stud welding unit can only be used with the HBS stud welding guns C 08, CA 08 and PAH-1, the welding heads KAH 412 and KAH 412 LA as well as the automatic stud feeder VBZ-3.

The intended use also implies observance of the operating manual of the component used and compliance with the intervals and conditions for inspection and maintenance of the stud welding unit and the components employed.

◆ Always check the operating manual of your stud welding gun whether it may be used with this stud welding unit.

The stud welding unit must be suitable for welding the welding elements in use.

Welding elements manufactured with the cold formed process have a flange and an ignition tip. During welding, the flange prevents the arc getting to the cylindric part of the welding element and increases simultaneously the welding area.

◆ **Please refer to the operating manual of your stud welding gun for detailed information on which welding elements may be used.**

All rights reserved – Reprinting, in whole or in part, only with the approval of the manufacturer

7 Warranty

Please refer to the latest "General Terms and Conditions" for the scope of the warranty.

The warranty does not cover faults caused by e.g.

– Normal wear,
– Improper handling,
– Failure to observe the operating manual,
– Failure to observe the safety precautions,
– Use for other than the intended purpose, or
– Transport damage.

Warranty entitlement shall no longer be valid if modifications, changes or service and repair work is carried out by unauthorised persons or without the knowledge of the manufacturer. Invalidation of warranty entitlement shall also render the declaration of conformity invalid. The CE marking shall be declared invalid by the manufacturer.

We expressly point out that only spare parts and accessories or components approved by us may be used. The same applies likewise to installed units from our sub-suppliers.

©HBS Welding Systems GmbH

All rights reserved – Reprinting, in whole or in part, only with the approval of the manufacturer

8 Components of the Stud Welding Unit

8.1 Main Assemblies

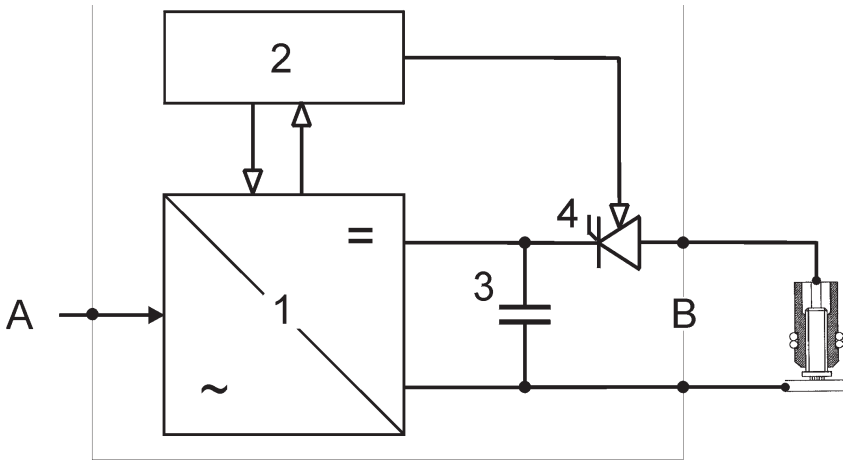

1- Charging device

2 - Control

3 - Welding capacitors

4 - Welding thyristor

A - Primary supply

B - Welding circuit

The mains alternating voltage is converted to direct voltage in the **charging device (1)**. Charging of the **welding capacitors (3)** is performed with the charging device and is fully adjustable. The welding capacitors store the energy required for the welding process. The quantity of energy is defined by the operator via the charging voltage.

The **welding thyristor (4)** releases the charging voltage.

The charging process and the welding process are controlled by the **control system (2)**.

The negative pole of the capacitor is connected to the welding gun. The positive pole is usually connected to the workpiece via vice grips.

The type plate is located on the backside of the stud welding unit.

All rights reserved – Reprinting, in whole or in part, only with the approval of the manufacturer

Type plate

The type plate contains the following information:

- Manufacturer
- Type
- Order No./Serial No.
- Primary voltage
- Fuse
- Power consumption
- Cooling class
- IP code
- Date

©HBS Welding Systems GmbH

All rights reserved – Reprinting, in whole or in part, only with the approval of the manufacturer

8.2 Control Panel and Display

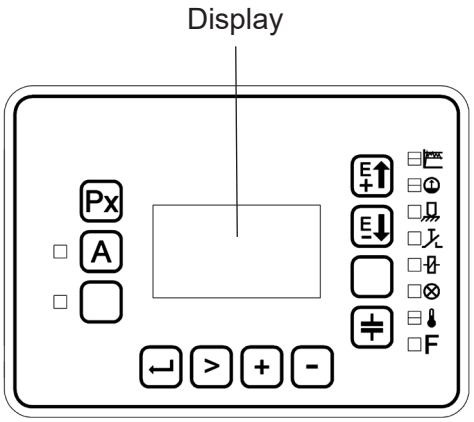

- Px — Trigger **CHANGE OVER OF PROGRAMME**
- A — Trigger **AUTOMATIC**
- ↵ — Trigger **ENTER**
- > — Trigger **ARROW**
- + — Trigger „**+**“
- - — Trigger „**-**“
- E+ — Trigger **HIGHER ENERGY**
- E- — Trigger **LOWER ENERGY**
- ≠ — Trigger **CHANGE OVER OF CAPACITY**
- ☐ — Triggers for simplified language setting

☐ A	LED	green	= AUTOMATIC on
	LED	green red	= CP value within tolerance range = CP value out of tolerance range
	LED	green red	= Stand-by display = Charging
☐	LED	yellow	= Contact
☐	LED	yellow	= Trigger
☐	LED	yellow	= Solenoid
☐	LED	rot	= Stud welding unit is locked
	LED	green red	= Temperature OK = Temperature error
☐ F	LED	red	= Error

All rights reserved – Reprinting, in whole or in part, only with the approval of the manufacturer

The terminal presents the interface to you, the operator.

The condition of the welding unit is monitored after switching-on. The display shows the type of the welding unit and the software version. The following parameters are monitored:

– Deviation from usual charging time,
– Unit temperature,
– Defective thyristor
– Reload relay
– Reload transistor.

After self-test, the digital **display** shows the last set welding energy and charging voltage.

The stud welding unit can be programmed in accordance with your requirements using the keys (**lower** - **higher**).

Using both keys you can enter the language selection.

Library mode

The stud welding unit is equipped with a library mode. In the library mode, the factory default setting of welding energy and charging voltages, depending on stud diameter and stud material can be called up and modified as required.

©HBS Welding Systems GmbH

All rights reserved – Reprinting, in whole or in part, only with the approval of the manufacturer

8.3 Symbols and Indicators in the Display

Light diodes (LEDs) with the following meanings are located on the right and left of the display:

green	-	lights up when the CP value [1] is within the tolerance
red	-	lights up when the CP value [1] is outside the tolerance
green	-	lights up when the stud welding unit is ready for welding
red	-	lights up when the capacitor battery is being charged
red-green	-	flashes alternately when the capacitor battery automatically adjusts the charging voltage This ensures that always the same charging voltage is provided.
yellow	-	lights up when there is electrical contact between the welding element and the workpiece
yellow	-	lights up on actuation of the welding-gun trigger
yellow	-	lights up when a welding gun with solenoids is connected
red	-	the stud welding unit is locked – after welding, as long as there is electrical contact to the workpiece – in the event of a fault – in the event of overtemperature
green	-	The stud welding unit is ready for welding.
red	-	the stud welding unit is locked – if the stud welding unit has been thermally overloaded The "**E xxx**" fault is shown in the display. After cooling off, you can continue work.
red	-	the stud welding unit is locked – if the stud welding unit has been thermally overloaded – if a fault has occurred in the stud welding unit (fault code is shown in display)
green	-	lights up if automatic mode is switched on

[1] CP = Controlled Process

All rights reserved – Reprinting, in whole or in part, only with the approval of the manufacturer

A fault message appears in the display if one of the variables named under point 8.2 "Keyboard and display" deviates from the standard value.

LCD display

Graphical display, 128 x 64 pixel
With backlight and automatic contrast control

Keys

↵	ENTER	Confirms the selected function
>	ARROW	Marks the selected programme item
+	PLUS	Increases the selected value
-	MINUS	Decreases the selected value
Px	Px	Programme selection
A	A	Switch on automatic mode, select automatic time (blow time)
÷	CAPACITY	Switching of capacity 66 000 µF/132 000 µF
E+	E+	Increase energy (charging voltage)
E-	E-	Reduce energy (charging voltage)

©HBS Welding Systems GmbH
All rights reserved – Reprinting, in whole or in part, only with the approval of the manufacturer

9 Welding Process

Stud welding with tip ignition is divided into contact stud welding and gap stud welding. This stud welding unit must be used exclusively for stud welding with contact and gap.

9.1 Contact Stud Welding

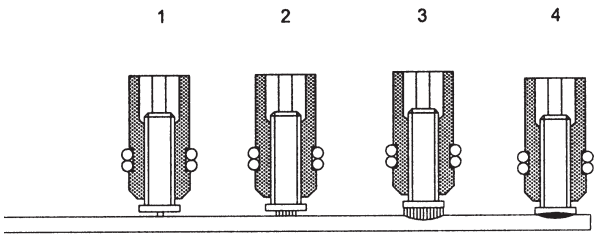

- The stud welding gun is placed onto the workpiece (see figure, **position 1**). The welding element which projects above the welding gun support legs, is pushed back tensioning a pressure spring.
- After positioning the stud welding gun against the workpiece, the operator presses the welding gun trigger and starts the welding process; thus the current circuit is closed.
- The capacitors of the stud welding unit are discharged. Because of the high discharge current, the ignition tip evaporates explosion-like. The air gap between welding element and workpiece is ionized (see figure, **position 2**), an arc is produced.
- The electric arc melts the face of the welding element together with an area of the workpiece of about the same dimension (see figure, **position 3**).
- Caused by the pressure spring, the welding element moves to the workpiece with a speed of 0,5 to 1 m/s. The adjusted spring force controls the plunging speed of the welding element.
- Higher plunging speed leads to shortened arc time and consequently to lower welding energy with identical voltage setting.
- The electric arc is cut as soon as the welding element touches the workpiece.
- Now the capacitors are short-circuited and the rest of the energy drains off (see figure, **position 4**).
- The pressure spring continues to push the welding element into the weld pool.

All rights reserved – Reprinting, in whole or in part, only with the approval of the manufacturer

- The weld pool solidifies and the welding element is physically connected to the workpiece.
- The time period between ignition of the arc and solidification of the weld pool is about 3 ms.
- The use of contact welding for rapidly oxidising materials like aluminium and aluminium alloys is not recommended because the arcing period with contact welding is longer than with gap stud welding.

©HBS Welding Systems GmbH

All rights reserved – Reprinting, in whole or in part, only with the approval of the manufacturer

9.2 Gap Stud Welding

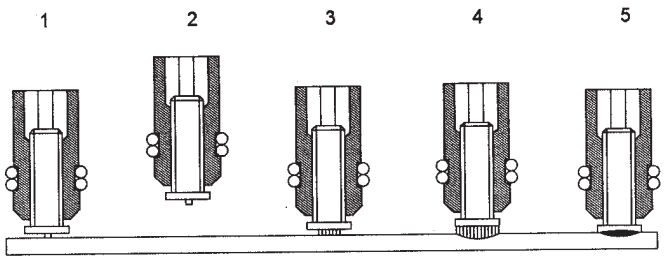

- The solenoid, which is integrated into the welding gun, lifts the welding element from the workpiece (see figure, **position 1**) to the adjusted value ”lift” above the workpiece and tensions a pressure spring (see figure, **position 2**).
- As soon as the welding piston has reached the upper stop, the current to the solenoid is cut. Simultaneously, the welding thyristor is triggered and releases the current flow to the welding element.
- The capacitors of the stud welding unit are discharged. Because of the high discharge current, the ignition tip evaporates explosion-like. The air gap between welding element and workpiece is ionized (see figure, **position 3**). An arc is produced.
- The electric arc melts the face of the welding element together with an area of the workpiece of about the same dimension (see figure, position 4).
- The welding element is moved by the pressure spring to the workpiece with a speed of 0.5 to 1.5 m/s. The adjusted spring force and the preset lift distance controls the plunging speed of the welding element.
- Higher plunging speed leads to shortened arc time and consequently to lower welding energy with identical voltage setting.
- The arc is cut as soon as the welding element touches the workpiece.
- Now the capacitors are short-circuited and the rest of the energy drains off (see figure, **position 5**).
- The pressure spring continues to push the welding element into the weld pool.
- The weld pool solidifies and the welding element is physically connected to the workpiece.
- The time period between ignition of the arc and solidification of the weld pool is about 1 to 2 ms.

All rights reserved – Reprinting, in whole or in part, only with the approval of the manufacturer

10 Preparing Workplace and Welding Process

Danger from fumes and airborne particulates

- Switch on the welding fume extractor at the workplace.
- Ensure that the room is well ventilated.
- Never weld in rooms with a ceiling height of less than 3 m.
- Observe furthermore your working instructions and the accident prevention regulations.

This will help to avoid health damage due to fumes and airborne particulates.

Danger from fire and explosion

- Remove all inflammable materials and liquids from your working area.
- Ensure that there are no explosive materials in your working area.
- Ensure that an approved fire extinguisher is available at the workplace.

Danger from tripping and falling

- Lay cables and connecting leads in such a way that they are protected against damage and
- that you or third parties cannot trip over them or fall.

Warning of weld spatter

- Ensure that there is no equipment or apparatus in the working area that could be damaged by weld spatter.
- Remove if necessary.

©HBS Welding Systems GmbH

All rights reserved – Reprinting, in whole or in part, only with the approval of the manufacturer

Warning of electromagnetic fields

- Ensure that there is no equipment or apparatus in the working area that could be damaged by magnetic fields.
- Remove if necessary.

Danger!

- Ensure that there is a free circulation of air through the housing of the stud welding unit.
- Always place the stud welding unit on a stable, level and clean surface.
- Check the condition of all cables and cable connections.
- Have defective cables or their connections immediately repaired or replaced by a qualified electrician.

10.1 Preparing Surfaces

- Remove
  - Paint, oil and other impurities,
  - Rust,
  - Non-conductive coatings (of surface-coated materials)

  from the welding surface and the contact points of the ground clamps.

  This ensures a high strength of the welded joints.
- **Weld the welding element only to a flat surface.**
- Ask your application consultant at HBS about welded joints on tubes and riffle plates (*see page 2*).

All rights reserved – Reprinting, in whole or in part, only with the approval of the manufacturer

10.2 Checking the Stud Welding Gun

- Always check the operating manual of your stud welding gun to see whether it may be used with this stud welding unit.

This stud welding unit can only be used with the HBS stud welding guns C 08, CA 08 and PAH-1.

- Check the chuck of your stud welding gun for proper fit and ensure it is tightened.
- Check the bellows of your stud welding gun for damage.
- Check if spring force and lift are set according to the welding parameter table in the operating manual of the stud welding gun.

- **Refer here to the operating manual of your stud welding gun.**

10.3 Checking the Stud Welding Head

- Always check the operating manual of your stud welding head to see whether it may be used with this stud welding unit.

This stud welding unit can only be used with the HBS stud welding heads KAH 412 and KAH 412 LA.

- Check the chuck of your stud welding head for proper fit and ensure it is tightened.
- Check the bellows of your stud welding head for damage.
- Check if spring force and lift are set according to the welding parameter table in the operating manual of the stud welding head.
- Check whether the welding head equipment has been selected correctly according to the welding task.

- **Refer here to the operating manual of your stud welding head.**

10.4 Checking the Automatic Stud Feeder

- Always check the operating manual of your automatic stud feeder to see whether it may be used with this stud welding unit.

This stud welding unit can only be used with the fully automatic stud feeder VBZ-3.

- **Refer here to the operating manual of your automatic stud feeder.**

©HBS Welding Systems GmbH

All rights reserved – Reprinting, in whole or in part, only with the approval of the manufacturer

11 Connection

- **First prepare your workplace.**
- Read and observe here *point 10 "Preparing Workplace and Welding Process"*.

Electric shock hazard

- Leave the stud welding unit switched off during connection of the connecting leads.

In this way you can avoid any unintentional starting of the welding process.

- **Secure the cables.**

Strong magnetic fields are generated during the welding process that can lead to whipping of the cables. This can cause the cables to come out of the plug sockets.

All rights reserved – Reprinting, in whole or in part, only with the approval of the manufacturer

11.1 Connecting the Welding Gun to the Stud Welding Unit

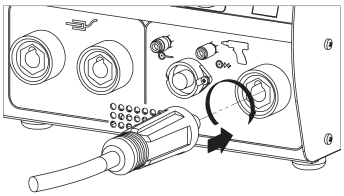

Connect the welding current cable

- Only now plug the welding current cable into the corresponding socket of the stud welding unit.
- Press in the plug and turn it firmly clockwise (to the right).

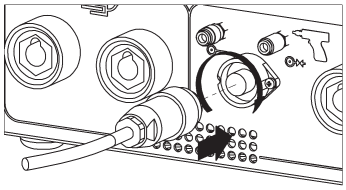

Connect the control cable

- Plug the control cable in the connector of the stud welding unit.
- Twist the retaining nut of the control cable connector clockwise.

Only loosely made connections will result in damage to the plug connectors.

- Therefore always check that the plug connector is firmly inserted.

This prevents a poor contact and hence overheating of the plug connectors.

11.2 Connecting the Welding Head to the Stud Welding Unit

- Connect the welding current cable and the control cable.
- Proceed as described in section „*11.1 Connecting the Welding Gun to the Stud Welding Unit*“.

Only loosely made connections will result in damage to the plug connectors.

- Therefore always check that the plug connector is firmly inserted.

This prevents a poor contact and hence overheating of the plug connectors.

©HBS Welding Systems GmbH

All rights reserved – Reprinting, in whole or in part, only with the approval of the manufacturer

11.3 Connecting the Adaptor

◆ Plug the adaptor if the connectors on your HBS components require this.

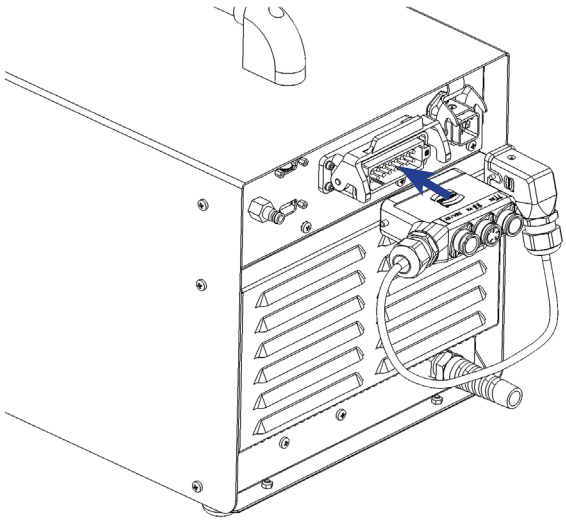

11.4 Connecting the Fully Automatic Stud Feeder to the Stud Welding Unit

◆ Connect the control socket of the feeding unit (front side) to the control socket X1of the stud welding unit (rear side):

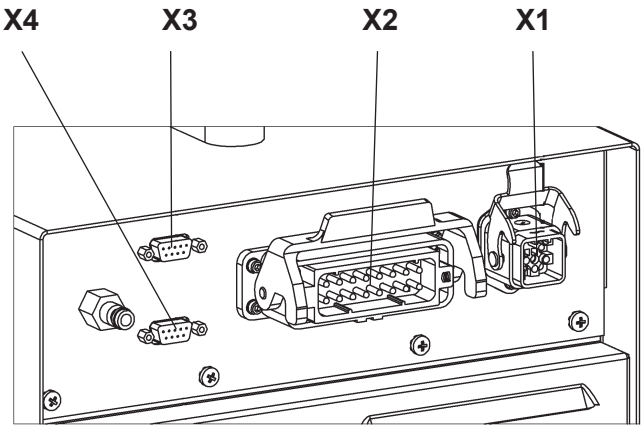

X1 - VBZ connection 12 poles

X2 - Connection external control 16 poles

X3 - RS232 remote control

X4 - RS232 read out

All rights reserved – Reprinting, in whole or in part, only with the approval of the manufacturer

11.5 Compressed Air Connection

In automatic mode the welding gun PAH-1 or the welding heads KAH 412 and KAH 412 LA for welding elements from 3 up to 8 mm Ø can be used.

You can place the welding elements into the welding gun manually (semi-automatic) or use a fully automatic stud feeder.

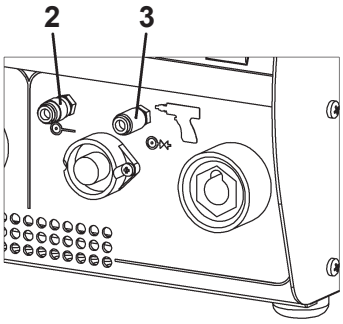

2 - Air outlet blue

3 - Air outlet black

◆ Plug the air connectors of the welding gun into the air outlet bushes at the front of the stud welding unit.

◆ Observe the color markings:

– **black** = **switched air** (during stud feeding time)

– **blue** = **continuous air**, for pressing the stud into the chuck and as a stop.

The stud welding unit controls the air between these two bushes.

☞ **If the conduits are wrongly connected, feeding and welding malfunctions will occur.**

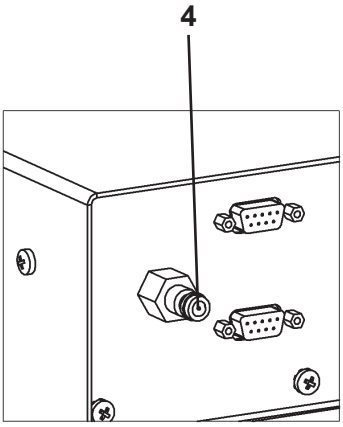

4 - Compressed air supply

◆ Connect the compressed air supply to the compressed air inlet of the stud welding unit (6 bar/800 l/min.)

©HBS Welding Systems GmbH

All rights reserved – Reprinting, in whole or in part, only with the approval of the manufacturer

- If you are using an **automatic welding head**, connect the compressed air supply to the compressed air input of the stud welding unit.
- If you are using a **fully automatic stud feeder**, connect the compressed air output of the feed unit to the compressed air input of the stud welding unit.

☞ ◆ **Refer here to the operating manual of your welding head or feeding unit.**

☞ **You can set the operating pressure of max. 6 bars with the pressure reducing valve of the feeding unit. In the filter unit, the compressed air is cleaned and drained.**

All rights reserved – Reprinting, in whole or in part, only with the approval of the manufacturer

11.6 Connecting the Ground Cable

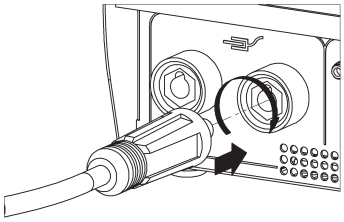

Connect the ground cable

- Plug the ground cable into the corresponding socket of the stud welding unit.
- Press in the plug and turn it firmly clockwise (to the right).

Only loosely made connections will result in damage to the plug connectors.

- Therefore always check that the plug connector is firmly inserted.

This prevents a poor contact and hence overheating of the plug connectors.

This stud welding unit is equipped with two ground connections. You can use the second ground connection to link several stud welding units with each other.

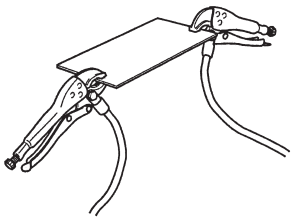

Connect the ground clamps

- Remove rust, paint and dirt from the points on the workpiece to which you wish to connect the ground clamps.
- Attach the ground clamps to the workpiece as tightly as possible.
- Pay attention to a good contact and symmetrical connection.

The welding point should be in the middle between the two ground clamps.

©HBS Welding Systems GmbH

All rights reserved – Reprinting, in whole or in part, only with the approval of the manufacturer

11.7 Connecting the Stud Welding Unit to the Mains Supply

Electric shock hazard

- Have an electrician check whether the plug socket to which you intended to connect the stud welding unit is correctly earthed.
- Connect the stud welding unit only to a mains supply with the same mains voltage as that indicated on the type plate.
- Compare the current consumption indicated on the type plate with the fuse of your mains power supply.
- Check that the stud welding unit is switched off.
- Only now insert the plug into the plug socket.

All rights reserved – Reprinting, in whole or in part, only with the approval of the manufacturer

11.8 Integrating the Stud Welding Unit into a CNC System

- To do this, connect the control socket of the feeding unit (on the front side) to the control socket X1 of the stud welding unit (on the rear side).
- Proceed as described in section *11.3 Connecting the Fully Automatic Stud Feeder to the Stud Welding Unit*.
- Then connect the control sockets X2, X3 and X4 of the stud welding unit (on the rear side) with the external control as follows:

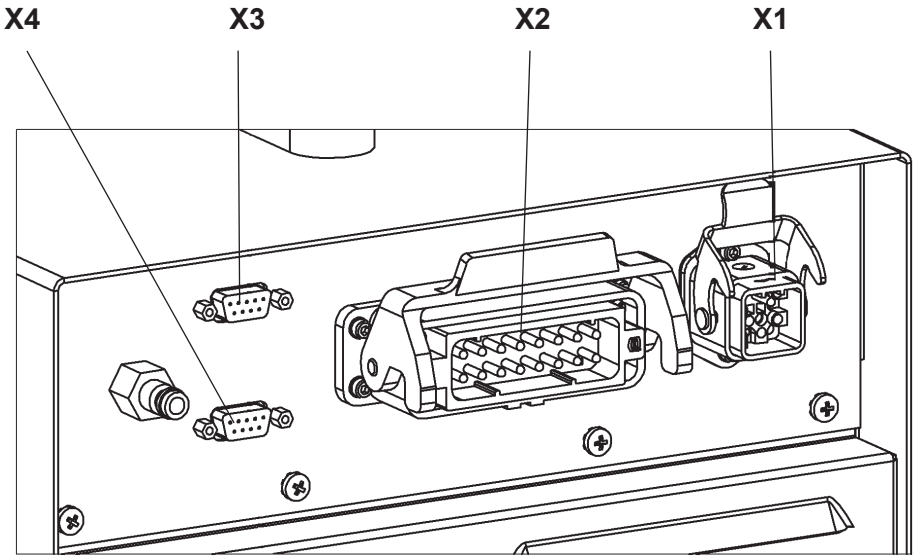

X1 - VBZ connection 12 poles

X2 - Connection external control

X3 - RS232 remote control

X4 - RS232 read out

Operating voltage for inputs and outputs: 24 V DC,

Current capacity: max. 50 mA

©HBS Welding Systems GmbH

All rights reserved – Reprinting, in whole or in part, only with the approval of the manufacturer

CDMi automatic interfaces

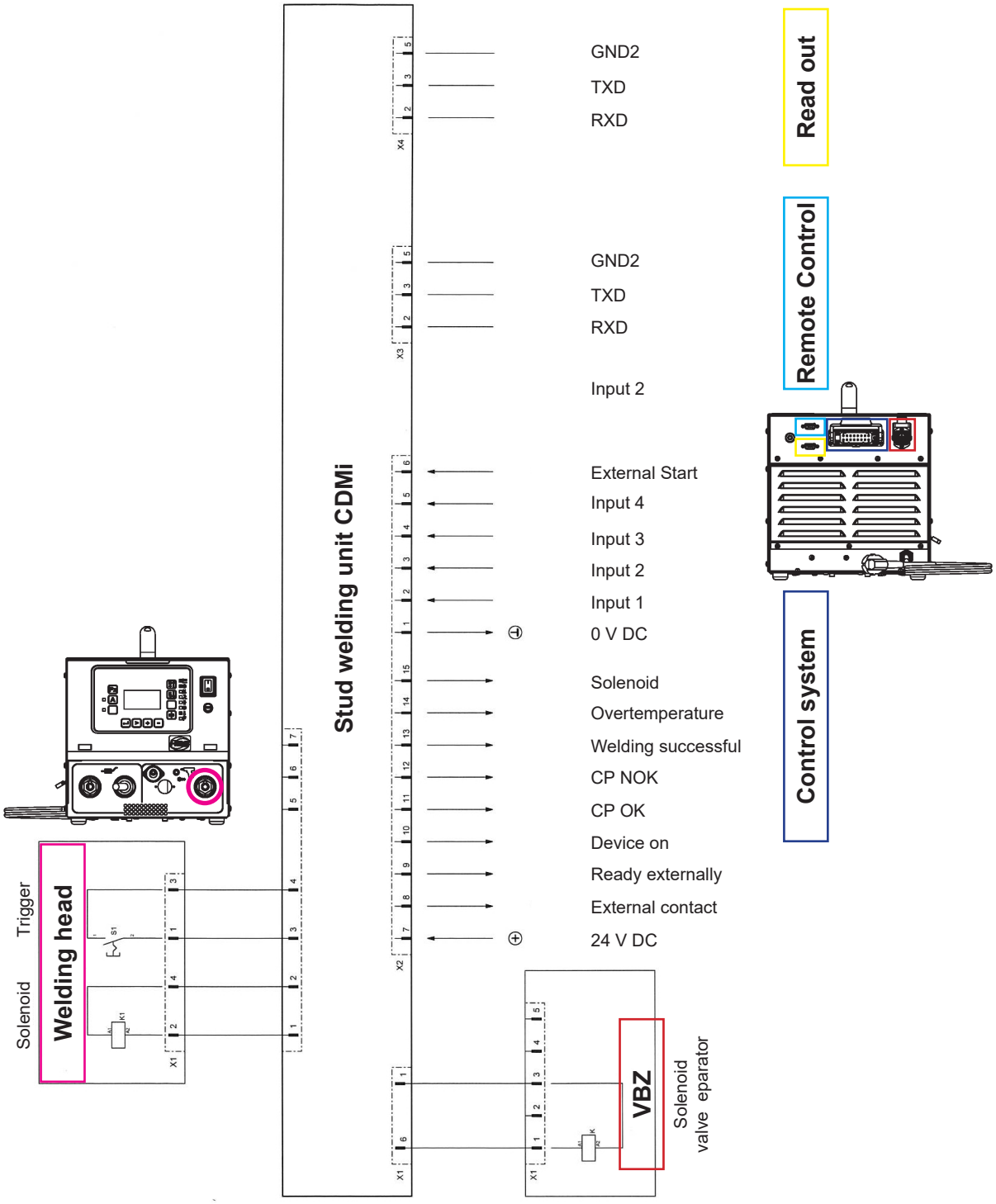

All rights reserved – Reprinting, in whole or in part, only with the approval of the manufacturer

11.8.1 VBZ-3

You can set the blow time (stud feeding time) for the VBZ. The blow time can be set between 250 ms and 5 000 ms in 250 ms steps.

11.8.2 Control System

Output: External contact

For optimum control of the process timing in CNC stud welding machines, an external contact scan takes place between the workpiece and welding head. If contact is reported, the transistor switches on (control jack X2, 16-poles, pin 8).

◆ Refer here to the operating manual of your welding head.

Output: Device on

The external control system receives a signal on this output which reports that the stud welding unit is switched on (control jack X2, 16-pin, pin 9).

Output: Ready externally (loading control)

For optimum control of the process timing in CNC stud welding machines, external loading control takes place. If the stud welding unit is ready for welding, the transistor switches on (control jack X2, 16-poles, pin 10).

Output: CP OK

The external control system receives a signal on this output which reports that the CP value is within the specified tolerance (control jack X2, 16-poles, pin 11).

Output: CP NOK

The CP value is outside the specified tolerance (control jack X2, 16-poles, pin 12)

Output: Welding successful

This output is used to detect whether welding has taken place (control jack X2, 16-poles, pin 13).

©HBS Welding Systems GmbH

All rights reserved – Reprinting, in whole or in part, only with the approval of the manufacturer

Output: Overtemperature

The external control system receives a signal on this output which reports that either the temperature of a charging unit or the internal temperature of the stud welding unit is too high (control jack X2, 16-poles, pin 14).

Output: Solenoid

The external control system receives the "solenoid present on welding head" signal (control jack X2, 16-poles, pin 15).

Input 1 to 4

15 programmes can be selected from the external control system on this input (control jack X2, 16-poles, pin 2, 3, 4 and 5).

This is possible with the following combinations:

1	0	0	0	Programme 1
0	1	0	0	Programme 2
1	1	0	0	Programme 3
0	0	1	0	Programme 4
1	0	1	0	Programme 5
0	1	1	0	Programme 6
1	1	1	0	Programme 7
0	0	0	1	Programme 8
1	0	0	1	Programme 9
0	1	0	1	Programme 10
1	1	0	1	Programme 11
0	0	1	1	Programme 12
1	0	1	1	Programme 13
0	1	1	1	Programme 14
1	1	1	1	Programme 15

All rights reserved – Reprinting, in whole or in part, only with the approval of the manufacturer

Input: External welding start

An additional external welding start is provided on the rear side of the stud welding unit for linking the stud welding unit to CNC stud welding machines (control jack X2, 16-poles, pin 6). The input is designed for 24 V-DC control devices (signal length min. 200 ms).

The welding start can also be on the front side of the stud welding unit, using the welding gun control plug (pin 3; 4).

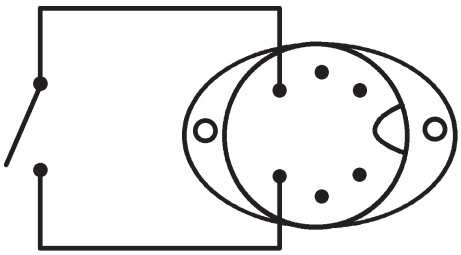

Pin 3; 4 is to be short circuited for at leasts 100 ms for the welding start.

11.8.3 Remote Control

You can control the stud welding unit remotely via the RS 232 interface (X3, 9-poles).

11.8.4 Read Out

You can read out the data of the stud welding unit via the RS 232 interface (X4, 9-poles).

©HBS Welding Systems GmbH

All rights reserved – Reprinting, in whole or in part, only with the approval of the manufacturer

12 Welding

- **First connect up the stud welding unit.**
- Read and observe here *point 11 „Connection“*.

Life-threatening danger for wearers of active implanted cardiac devices

Danger for workers at particular risk within the meaning of the EMF directive

Persons at particular risk within the meaning of the EMF directive are:

– Workers with active implanted medical devices
– Workers with passive implanted medical devices that contain metal
– Workers with medical devices worn on the body
– Pregnant workers.

- Never operate the stud welding machine if you are among the group of workers at particular risk within the meaning of the EMF directive.
- In this case, never remain in the vicinity of the stud welding machine during welding.
- Never operate the stud welding machine if persons are located nearby who are among the group of workers at particular risk within the meaning of the EMF directive.

Strong electromagnetic fields are produced in the vicinity of the stud welding machine during welding. These fields can adversely affect the function of medical devices as well as the course of a pregnancy.

All rights reserved – Reprinting, in whole or in part, only with the approval of the manufacturer

12.1 Switching on the Stud Welding Unit

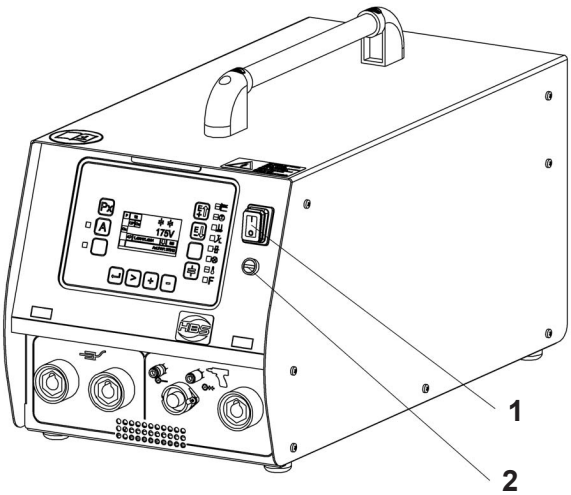

1 - Mains switch

2 - Mains fuse

◆ Only now switch on the stud welding unit at the **mains switch (1)**.

12.2 Determining the Charging Voltage

Determination of charging voltage at the stud welding unit using the keys E↑ and E↓ depends i.a. on

– the welding gun used,

– the material of the welding element,

– the diameter of the welding element,

– the material of the workpiece.

◆ Determine the charging voltage to be set at the stud welding unit using the following tables.

☞ **The figures in these table are indicative values and must be checked by means of a test welding on the original material with the same properties as the original workpiece.**

©HBS Welding Systems GmbH

All rights reserved – Reprinting, in whole or in part, only with the approval of the manufacturer

Determining the Charging Voltage for the Welding Guns C 08 and CA 08

Material of welding elements	Diameter of welding elements				CDMi 3202		
	metric [6]		imperial (US)		Charging voltage [1]	Capacity	Energy
	PT, UT	IT	PT, UT	IT	in V	(Thyristor)	in Ws
Material of workpiece: Mild steel (suitable for welding)							
4.8 (suitable for welding)	M3, 3 mm	--	1/8“	--	80	⫩	211
4.8 (suitable for welding)	M4, 4 mm	--	5/32“	--	85	⫩	238
4.8 (suitable for welding)	M5, 5 mm	5 mm, M3	3/16“	#10-32	85	⫩ ⫩	477
4.8 (suitable for welding)	M6, 6 mm	6 mm, M4	1/4“	1/4-20	110	⫩ ⫩	799
4.8 (suitable for welding)	M8, 7.1 mm	7.1 mm, M5	5/16“	5/16-18	150	⫩ ⫩	1 485
Material of workpiece: Galvanised steel (suitable for welding)							
A2-50	M3, 3 mm	--	1/8“	--	85	⫩	238
A2-50	M4, 4 mm	--	5/32“	--	110	⫩	399
A2-50	M5, 5 mm	5 mm, M3	3/16“	#10-32	145	⫩ ⫩	1 388
A2-50	M6, 6 mm	6 mm, M4	1/4“	1/4-20	180	⫩ ⫩	2 138
Material of workpiece: Alloyed steel (suitable for welding)							
A2-50	M3, 3 mm	--	1/8“	--	60	⫩	119
A2-50	M4, 4 mm	--	5/32“	--	80	⫩	211
A2-50	M5, 5 mm	5 mm, M3	3/16“	#10-32	80	⫩ ⫩	422
A2-50	M6, 6 mm	6 mm, M4	1/4“	1/4-20	110	⫩ ⫩	799
A2-50	M8, 7.1 mm	7.1 mm, M5	5/16“	5/16-18	150	⫩ ⫩	1 485
Material of workpiece: Alloyed steel (suitable for welding)							
CuZn37	M3, 3 mm	--	1/8“	--	60	⫩	119
CuZn37	M4, 4 mm	--	5/32“	--	85	⫩	238
CuZn37	M5, 5 mm	--	3/16“	--	85 [2]	⫩ ⫩	477
CuZn37	M6, 6 mm	--	1/4“	--	130 [2]	⫩ ⫩	1 115
CuZn37	M8, 7.1 mm	--	5/16“	--	190 [2]	⫩ ⫩	2 383
Material of workpiece: Galvanised steel (suitable for welding)							
CuZn37	M3, 3 mm	--	1/8“	--	85	⫩	238
CuZn37	M4, 4 mm	--	5/32“	--	110	⫩	399
CuZn37	M5, 5 mm	--	3/16“	--	120	⫩ ⫩	950
CuZn37	M6, 6 mm	--	1/4“	--	130	⫩ ⫩	1 115
CuZn37	M8, 7.1 mm	--	5/16“	--	155	⫩ ⫩	1 586
Material of workpiece: Aluminium							
AlMg3	M3, 3 mm	--	1/8“	--	70	⫩	162
AlMg3	M4, 4 mm	--	5/32“	--	90	⫩	267
AlMg3	M5, 5 mm	5 mm, M3	3/16“	#10-32	90 [3]	⫩ ⫩	535
AlMg3	M6, 6 mm	6 mm, M4	1/4“	1/4-20	115 [3]	⫩ ⫩	873
AlMg3 [4]	M8, 7.1 mm [4]	7.1 mm, M5 [3]	5/16“	5/16-18	--- [4]	--- [4]	--- [4]

[1] to be checked by test weldings

[2] only possible in combination with welding gun C 08

[3] only possible in combination with welding gun CA 08

[4] Due to the material properties of Aluminium and resulting limitations for the process stability, a maximum stud diameter of M6 is recommended.

[6] according to **EN ISO 13918**

All rights reserved – Reprinting, in whole or in part, only with the approval of the manufacturer

Determining the Charging Voltage for the Welding Gun PAH-1

(archived in library mode)

Material of welding elements	Diameter of welding elements				CDMi 3202		
	metric [6]		imperial (US)		Charging voltage	Capacity	Energy
	PT, UT	IT	PT, UT	IT	in V	(Thyristor)	in Ws
Material of workpiece: Mild steel (suitable for welding)							
4.8 (suitable for welding)	M3, 3 mm	--	1/8“	--	80	⫩	211
4.8 (suitable for welding)	M4, 4 mm	--	5/32“	--	90	⫩	267
4.8 (suitable for welding)	M5, 5 mm	5 mm, M3	3/16“	#10-32	90	⫩⫩	535
4.8 (suitable for welding)	M6, 6 mm	6 mm, M4	1/4“	1/4-20	115	⫩⫩	873
4.8 (suitable for welding)	M8, 7.1 mm	7.1 mm, M5	5/16“	5/16-18	155	⫩⫩	1586
Material of workpiece: Galvanised steel (suitable for welding)							
A2-50	M3, 3 mm	--	1/8“	--	85	⫩	238
A2-50	M4, 4 mm	--	5/32“	--	110	⫩	399
A2-50	M5, 5 mm	5 mm, M3	3/16“	#10-32	125	⫩⫩	1031
A2-50	M6, 6 mm	6 mm, M4	1/4“	1/4-20	155	⫩⫩	1586
A2-50	M8, 7.1 mm	7.1 mm, M5	5/16“	5/16-18	190	⫩⫩	2383
Material of workpiece: Alloyed steel (suitable for welding)							
A2-50	M3, 3 mm	--	1/8“	--	60	⫩	119
A2-50	M4, 4 mm	--	5/32“	--	80	⫩	211
A2-50	M5, 5 mm	5 mm, M3	3/16“	#10-32	90	⫩⫩	535
A2-50	M6, 6 mm	6 mm, M4	1/4“	1/4-20	115	⫩⫩	873
A2-50	M8, 7.1 mm	7.1 mm, M5	5/16“	5/16-18	155	⫩⫩	1586
Material of workpiece: Alloyed steel (suitable for welding)							
CuZn37	M3, 3 mm	--	1/8“	--	60	⫩	119
CuZn37	M4, 4 mm	--	5/32“	--	85	⫩	238
CuZn37	M5, 5 mm	--	3/16“	--	85	⫩⫩	477
CuZn37	M6, 6 mm	--	1/4“	--	130	⫩⫩	1115
CuZn37	M8, 7.1 mm	--	5/16“	--	180	⫩⫩	2138
Material of workpiece: Galvanised steel (suitable for welding)							
CuZn37	M3, 3 mm	--	1/8“	--	90	⫩	267
CuZn37	M4, 4 mm	--	5/32“	--	120	⫩	475
CuZn37	M5, 5 mm	--	3/16“	--	120	⫩⫩	950
CuZn37	M6, 6 mm	--	1/4“	--	130	⫩⫩	1115
CuZn37	M8, 7.1 mm	--	5/16“	--	165	⫩⫩	1797
Material of workpiece: Aluminium							
AlMg3	M3, 3 mm	--	1/8“	--	70	⫩	162
AlMg3	M4, 4 mm	--	5/32“	--	90	⫩	267
AlMg3	M5, 5 mm	5 mm, M3	3/16“	#10-32	105	⫩⫩	728
AlMg3	M6, 6 mm	6 mm, M4	1/4“	1/4-20	120	⫩⫩	950
AlMg3 [4]	M8, 7.1 mm [4]	7.1 mm, M5 [4]	5/16“	5/16-18	--- [4]	--- [4]	--- [4]

[1] to be checked by test weldings

[4] Due to the material properties of Aluminium and resulting limitations for the process stability, a maximum stud diameter of M6 is recommended.

[6] according to **EN ISO 13918**

©HBS Welding Systems GmbH

All rights reserved – Reprinting, in whole or in part, only with the approval of the manufacturer

Determining the Charging Voltage for the Welding Head KAH 412

Material of welding elements	Diameter of welding elements				CDMi 3202		
	metric [6]		imperial (US)		Charging voltage [1]	Capacity	Energy
	PT, UT	IT	PT, UT	IT	in V	(Thyristor)	in Ws
Material of workpiece: Mild steel (suitable for welding)							
4.8 (suitable for welding)	M3, 3 mm	--	1/8“	--	90	⫩	267
4.8 (suitable for welding)	M4, 4 mm	--	5/32“	--	105	⫩	364
4.8 (suitable for welding)	M5, 5 mm	5 mm, M3	3/16“	#10-32	125	⫩ ⫩	1 031
4.8 (suitable for welding)	M6, 6 mm	6 mm, M4	1/4“	1/4-20	140	⫩ ⫩	1 294
4.8 (suitable for welding)	M8, 7.1 mm	7.1 mm, M5	5/16“	5/16-18	180	⫩ ⫩	2 138
Material of workpiece: Galvanised steel (suitable for welding)							
A2-50	M3, 3 mm	--	1/8“	--	90	⫩	267
A2-50	M4, 4 mm	--	5/32“	--	130	⫩	558
A2-50	M5, 5 mm	5 mm, M3	3/16“	#10-32	140	⫩ ⫩	1 294
A2-50	M6, 6 mm	6 mm, M4	1/4“	1/4-20	175	⫩ ⫩	2 021
A2-50	M8, 7.1 mm	7.1 mm, M5	5/16“	5/16-18	205	⫩ ⫩	2 774
Material of workpiece: Alloyed steel (suitable for welding)							
A2-50	M3, 3 mm	--	1/8“	--	90	⫩	267
A2-50	M4, 4 mm	--	5/32“	--	105	⫩	364
A2-50	M5, 5 mm	5 mm, M3	3/16“	#10-32	115	⫩ ⫩	873
A2-50	M6, 6 mm	6 mm, M4	1/4“	1/4-20	130	⫩ ⫩	1 115
A2-50	M8, 7.1 mm	7.1 mm, M5	5/16“	5/16-18	185	⫩ ⫩	2 259
Material of workpiece: Alloyed steel (suitable for welding)							
CuZn37	M3, 3 mm	--	1/8“	--	95	⫩	298
CuZn37	M4, 4 mm	--	5/32“	--	135	⫩	601
CuZn37	M5, 5 mm	--	3/16“	--	155	⫩ ⫩	1 586
CuZn37	M6, 6 mm	--	1/4“	--	175	⫩ ⫩	2 021
CuZn37	M8, 7.1 mm	--	5/16“	--	210	⫩ ⫩	2 911
Material of workpiece: Galvanised steel (suitable for welding)							
CuZn37	M3, 3 mm	--	1/8“	--	100	⫩	330
CuZn37	M4, 4 mm	--	5/32“	--	135	⫩	601
CuZn37	M5, 5 mm	--	3/16“	--	160	⫩ ⫩	1 690
CuZn37	M6, 6 mm	--	1/4“	--	185	⫩ ⫩	2 259
CuZn37	M8, 7.1 mm	--	5/16“	--	215	⫩ ⫩	3 051
Material of workpiece: Aluminium							
AlMg3	M3, 3 mm	--	1/8“	--	85	⫩	238
AlMg3	M4, 4 mm	--	5/32“	--	105	⫩	364
AlMg3	M5, 5 mm	5 mm, M3	3/16“	#10-32	120	⫩ ⫩	950
AlMg3	M6, 6 mm	6 mm, M4	1/4“	1/4-20	150	⫩ ⫩	1 485
AlMg3 [4]	M8, 7.1 mm [4]	7.1 mm, M5 [4]	5/16“	5/16-18	--- [4]	--- [4]	--- [4]

[1] to be checked by test weldings

[4] Due to the material properties of Aluminium and resulting limitations for the process stability, a maximum stud diameter of M6 is recommended.

[5] When using other ground cable configurations welding parameters may differ from the standards. Generally, longer ground cables require a higher charging voltage. The values shown consider as recommendation when using the stud welding unit as a component in a MPW 2010.

[6] according to **EN ISO 13918**

All rights reserved – Reprinting, in whole or in part, only with the approval of the manufacturer

12.3 Setting Options

Delivery condition

When you switch on the stud welding unit for the first time, you can check and set the language, date and time:

```
Setup
Language <english>
```

◆ If necessary, change the language using the two touch keys [+] and [-].

◆ Confirm the language setting with the Enter key [↵].

◆ Proceed as described above for the day, month, year, hour and minute settings.

◆ If necessary, change the settings with the two touch keys [+] and [-].

◆ Confirm each of the settings with the Enter key [↵].

After confirming the minute setting, all settings are displayed again:

```
Language  <english>
Date      28:04:14
Time      08:15
 OK?
```

◆ Confirm the settings with the ENTER key [↵].

(Use the [>] touch key to return to setup mode.)

©HBS Welding Systems GmbH

All rights reserved – Reprinting, in whole or in part, only with the approval of the manufacturer

Basic settings

You can set the machine according to your requirements. To do this, call up the submenu with the arrow key [>].

The following menu items are then available to you:

Library	Calls up the library for stud diameter and material
Setup CP	Settings of the CP functions
Setup User	Settings for counter, language, unit, date, time and baud rate
Service	For internal use/service settings
Gun test	Menu item is only displayed if welding guns and welding heads which have a solenoid are connected

In general, select the submenu with the arrow key [>], and select the menu item by pressing the arrow key [>] again.

If the arrow key [>] is pressed for approx. two seconds, the system cancels the setting process. The system changes back to the main menu from all levels without adopting the changed values.

Open the selected menu item with the Enter key [↵].

Confirming settings and exiting a menu item can also be done with the Enter key [↵].

After the stud welding unit has been switched on, the following appears in the display:

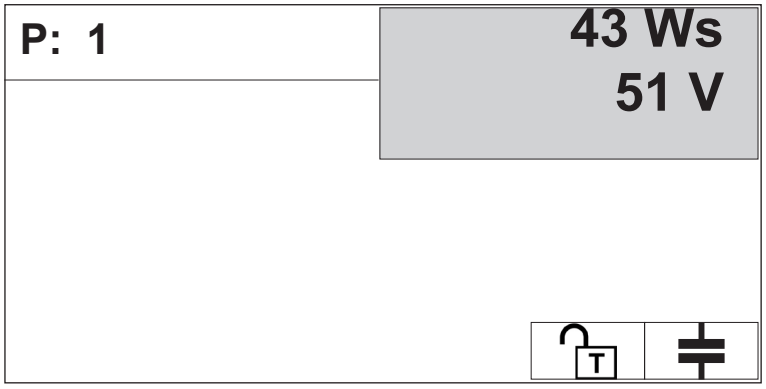

All rights reserved – Reprinting, in whole or in part, only with the approval of the manufacturer

12.3.1 Simplified Language Setting

Use this function to change the display of the stud welding unit to a different language.

◆ Use the [E+] and [E−] touch keys to select the charging voltage of 123 V.

◆ Now press both touch keys [ ] simultaneously:

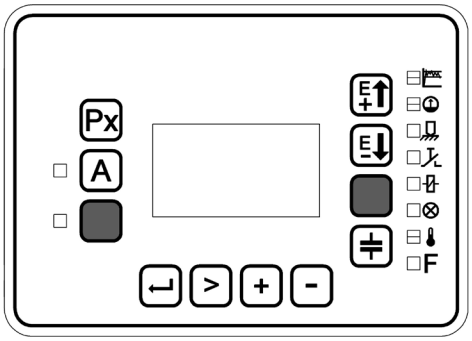

The LED next to the left touch key [ ] illuminates green. The set language is displayed:

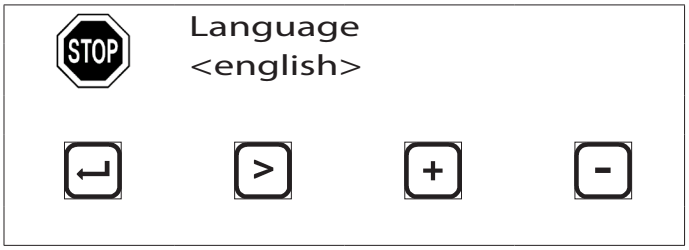

◆ Select a language with the two touch keys [+] and [−].

◆ Confirm the selection with the Enter key [↵].

The language setting is saved and the program returns to the main menu.

Press the arrow key [>] for a longer time to return to the main menu without changing the previous language.

©HBS Welding Systems GmbH

All rights reserved – Reprinting, in whole or in part, only with the approval of the manufacturer

12.3.2 Setting Charging Voltage

- **First determine the necessary charging voltage.**
- Read and observe here *point 12.2 "Determining the charging voltage"*.

- Set the necessary charging voltage with the [E+] and [E-] keys on the display:

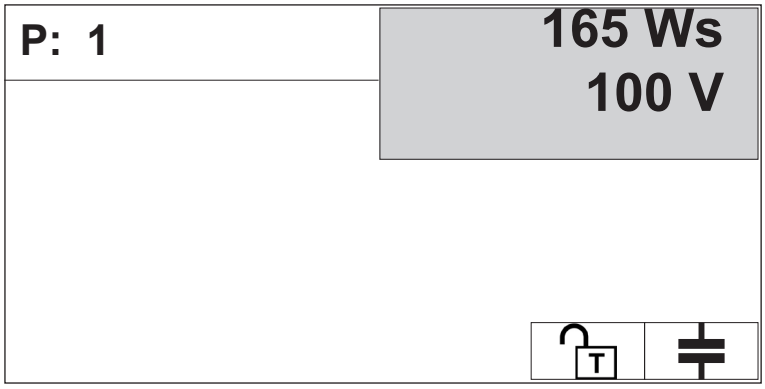

The settings are automatically saved.

All rights reserved – Reprinting, in whole or in part, only with the approval of the manufacturer

12.3.3 Setting Capacity

Under this menu item, you can select the welding energy by switching the capacity of your device.

Two levels (1600 Ws and 3200 Ws) are available.

- **First determine the necessary capacity.**
- Read and observe here *point 12.2 "Determining the charging voltage"*.

- Select the desired charging capacity with the capacity key ⫩.

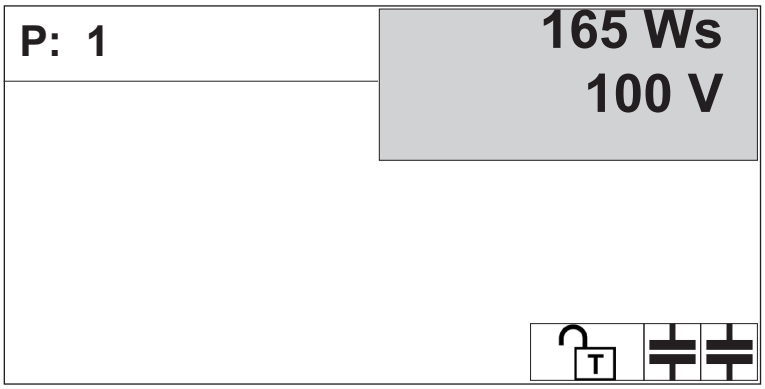

One or two capacitors are illustrated on the top right of the display:

⫩ = Selection: 1600 Ws

⫩ ⫩ = Selection: 3200 Ws

The settings are automatically saved.

©HBS Welding Systems GmbH
All rights reserved – Reprinting, in whole or in part, only with the approval of the manufacturer

12.3.4 Selecting Programmes

In the CDMi stud welding unit, you can select 15 different programmes. The programmes can be made up of different functions (capacity, energy, etc.).

You can select programmes 1 to 15 with the Px key.

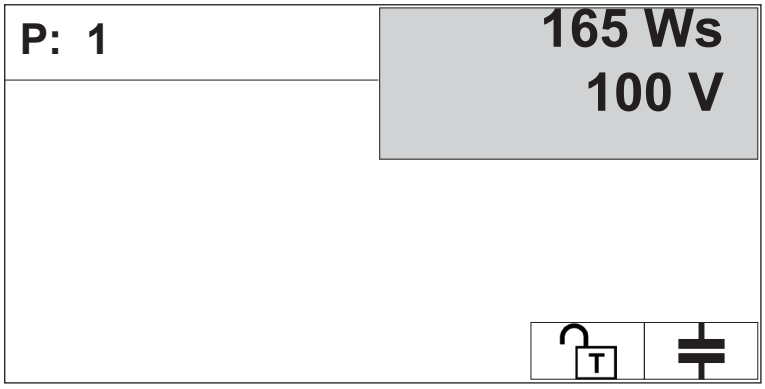

The display shows you all previously preset values.

All rights reserved – Reprinting, in whole or in part, only with the approval of the manufacturer

12.3.5 Setting Stud Feeding Time (Automatic)

In automatic mode, you can set the blow time (stud feeding time) for the VBZ and plunger. The blow time can be set between 250 ms and 5 000 ms in 250 ms steps.

◆ To do so, press the automatic key A.

The "AUTOMATIC" □ A LED lights up; the blow time with value 250 ms appears on the left side of the display.

◆ By pressing the A automatic key again, the value increases by 250 ms.

The settings are automatically saved.

The display shows you all set values:

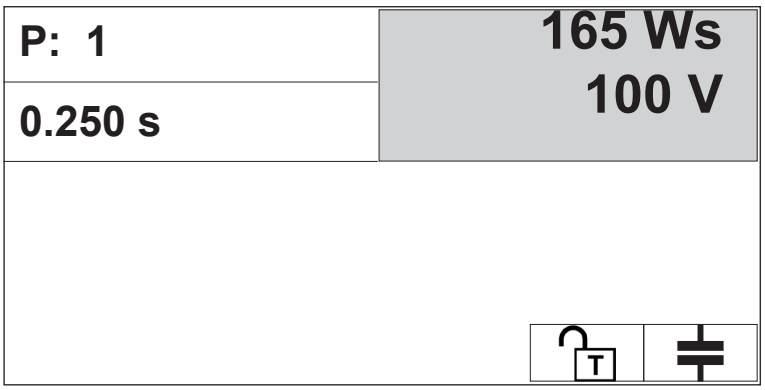

After the value "5 000 ms" has been reached, the blow time switches off and the "AUTOMATIC" □ A LED goes out.

©HBS Welding Systems GmbH
All rights reserved – Reprinting, in whole or in part, only with the approval of the manufacturer

12.3.6 Calling up Library

In the "Library" menu item, you can call up the energy related to stud diameter and material. The preset values are reference values. They apply if the stud and workpiece are made of the same materials.

◆ Press the [>] arrow key to call up the submenu.

◆ Now press the [>] arrow key until the "<" character appears in front of "Library".

```
Menu 1/1

<    Library                    >
     Setup CP
     Setup User
     Service
```

◆ Open the "Library" menu item with the Enter key [↵].

Selecting material

◆ Select "Stud" with the [>] arrow key.

```
P: 1          1/1
Library
Stud          <Fe4.8>
Mat.          Fe4.8
Diam.         M 3
Energy        100V
Capacit.      66mF
Lib.          On
```

◆ You can now select the material with the [+] or [-] key.

Selecting stud diameter

◆ Select "Diam." with the [>] arrow key.

```
P: 1          1/1
Library
Stud          A2-50
Mat.          A2-50
Diam.         <M 3>
Energy        100V
Capacit.      66mF
Lib.          On
```

◆ You can now select the stud diameter with the [+] or [-] key.

All rights reserved – Reprinting, in whole or in part, only with the approval of the manufacturer

Switching on library

◆ Select "Library" with the [>] arrow key.

```
P: 1        1/1
Library
Stud        A2-50
Mat.        A2-50
Diam.       <M 3>
Energy      100V
Capacit.    66mF
Lib.        <On>
```

◆ You can now switch the library function on or off with the [+] or [-] key.

Setting options - CDMi 3202:

Material of welding element	Material of workpiece		Diameter of welding element		
			PT	UT	IT
Fe4.8	Fe4.8	1)	M3 to M10	3 mm to 7.1 mm	5 mm to 7.1 mm (M3 to M5)
A2-50	Fe4.8vz	2)	M3 to M8	3 mm to 7.1 mm	5 mm and 6 mm (M3 and M4)
A2-50	A2-50	3)	M3 to M10	3 mm to 7.1 mm	5 mm to 7.1 mm (M3 to M5)
CuZn37	A2-50	4)	M3 to M8	3 mm to 7.1 mm	---
AlMg3	AlMg3	5)	M3 to M6	3 mm to 6 mm	5 mm and 6 mm (M3 and M4)

*) The welding parameters for these material combinations you can find in section *12.2 Determining the Charging Voltage*.

1) Material welding element: 4.8 (suitable for welding) / Material workpiece: Mild steel (suitable for welding)

2) Material welding element: A2-50 / Material workpiece: Galvanised steel (suitable for welding)

3) Material welding element: A2-50 / Material workpiece: Alloyed steel (suitable for welding)

4) Material welding element: CuZn37 / Material workpiece: Alloyed steel (suitable for welding)

5) Material welding element: AlMg3 / Material workpiece: Aluminium

☞ All setting parameters must be checked with test weldings and adapted to the welding result.

◆ Confirm your selection with the Enter key [↵].

©HBS Welding Systems GmbH

All rights reserved – Reprinting, in whole or in part, only with the approval of the manufacturer

The settings are automatically saved.

The display shows you all set values:

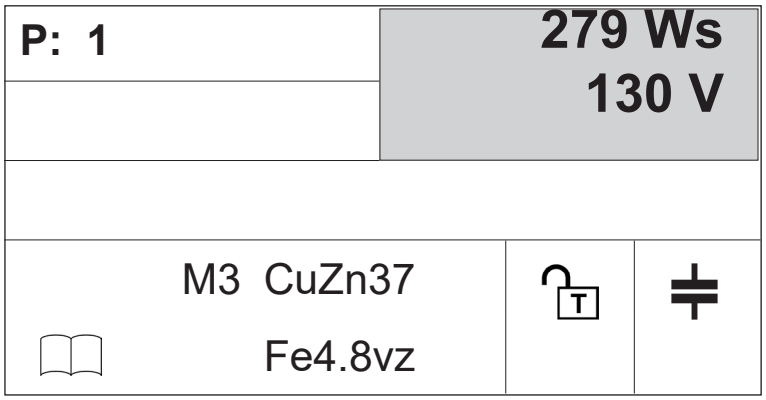

12.3.7 Setup CP

To be able to evaluate the process flow during welding, a CP value is calculated from the existing signals. The CP value is calculated via a special algorithm stored in the micro controller. No special welding guns and/or measuring cables are needed for this function monitoring system.

The micro controller determines the reference CP value during welding. This is the mean value of eight sequential welds. In the normal work flow, the current CP value is compared to the reference CP value. If the set tolerance range is exited, the system reports a deviation and displays this via LEDs or the digital output.

green: value is within the set tolerance range

red: value is outside of the set tolerance range

If desired, it is possible to lock the device after the occurrence of a deviation.

You have the option of entering a CP value manually. This value must first be determined by eight reference welds. This makes it possible to store the CP value for different programme processes. This enables storage of a special CP value for every stud/charge measurement as well as function monitoring.

All rights reserved – Reprinting, in whole or in part, only with the approval of the manufacturer

This is how you activate the CP control:

◆ Press the [>] arrow key to call up the submenu.

◆ Now press the [>] arrow key until the "<" character appears in front of "Setup CP".

```
Menu 1
        Library
<       Setup CP                    >
        Setup User
        Setup Service
```

◆ Open the "Setup CP" menu item with the Enter key [↵].

Select mode

◆ Select the menu item with the [>] arrow key.

```
P:      3       1/1
Setup CP

Mode:   <Input>
Ref:    00000
Tol:    01%
Stop:   Off
CP:     Off
```

You can choose between two modes with the [+] and [-] keys:

1. Mode Ref

The CP value is determined by 8 reference weldings.

2. Mode Input

The CP value was determined through previous welds and can be stored for every individual welding programme.

©HBS Welding Systems GmbH

All rights reserved – Reprinting, in whole or in part, only with the approval of the manufacturer

Mode Ref: Determine reference value

Enter tolerance value

◆ Select the menu item with the [>] arrow key.

```
P:      3        1/1
Setup CP

Mode:  Ref

Tol:   <01%>
Stop:  Off
CP:    Off
```

◆ Enter the tolerance value with the [+] and [-] keys.

You can enter tolerances between 1 % and 99 %.

Switch off stop

In this mode the reference values are determined first, therefore you can set the function to “Stop” to “On” or “Off”.

◆ Take note of the settings:

Tolerance:	
Stop:	
Reference value:	

Switch on process control (CP)

◆ Select the menu item with the [>] arrow key.

```
P:      3        1/1
Setup CP

Mode:  Ref

Tol:   10%
Stop:  Off
CP:    <Off>
```

◆ Switch the process control on or off with the [+] and [-] keys.

All rights reserved – Reprinting, in whole or in part, only with the approval of the manufacturer

```
P:      3        1/1
Setup CP

Mode:  Ref

Tol:   10%
Stop:  Off
CP:    <On>
```

◆ Confirm your settings with the Enter key ↵.

The settings are automatically saved.

The display shows you all set values:

P: 3		**279 Ws** **130 V**	
0,500			
CP	Ref 8	A	0
	M3 A2-50 Fe4.8vz	T	≠

CP	**Ref**	**8**	**A**	**xxxx**
CP - Ein	Reference mode	8 Reference weldings must be carried out	Current	value
	M3	**A2-50** **Fe4.8vz**	T	≠
Switch on library	Stud diameter	Material of welding element Material of workpiece	Keys are not locked *)	One thyristor is switched on

*) Keys can be locked via the RS232 interface (remote control)

◆ Set the parameters on the welding gun which you have determined through test welds.

◆ Perform now eight reference welds.

◆ After the second weld, the display counts backwards to zero.

©HBS Welding Systems GmbH

All rights reserved – Reprinting, in whole or in part, only with the approval of the manufacturer

From the values determined during the welding, the average value is ascertained as a reference value and saved:

P: 3		**279 Ws**	
0,500		**130 V**	
CP	R 5971	A	6135
	M3 A2-50		
	Fe4.8vz		

P: 3			**279 Ws**	
Programme 3			Determined energy	
0,500			**130 V**	
Blow time*)			Determined charging voltage	
CP	**R**	**xxxx**	**A**	**xxxx**
CP - On	Reference mode	Reference value	Current	value
	M3	**A2-50** **Fe4.8vz**		
Switch on library	Stud diameter	Material of welding element Material of workpiece	Keys are not locked *)	One thyristor is switched on

*) Blow time see chapter *12.3.5 Setting Stud Feeding Time (Automatic)* on page 54.

◆ Take note of the reference value. Add it to the table on page 59.

◆ You can now perform your welding.

All rights reserved – Reprinting, in whole or in part, only with the approval of the manufacturer

Mode Input: Enter reference value

◆ Select the menu item with the [>] arrow key.

```
P:        3        1/1
Setup CP

Mode:  Input
Ref:   <00000>
Tol:   01%
Stop:  Off
CP:    Off
```

◆ Enter the reference value with the [+] and [-] keys.

```
P:        3        1/1
Setup CP

Mode:  Input
Ref:   <05971>
Tol:   01%
Stop:  Off
CP:    Off
```

Enter tolerance value

◆ Select the menu item with the [>] arrow key.

```
P:        3        1/1
Setup CP

Mode:  Input
Ref:   <05971>
Tol:   <01%>
Stop:  Off
CP:    Off
```

◆ Enter the tolerance value with the [+] and [-] keys.

You can enter tolerances between 1 % and 99 %.

©HBS Welding Systems GmbH

All rights reserved – Reprinting, in whole or in part, only with the approval of the manufacturer

Switch on stop

◆ Select the menu item with the [>] arrow key.

```
P:      3       1/1
Setup CP

Mode:   Input
Ref:    <05971>
Tol:    10%
Stop:   <Off>
CP:     Off
```

◆ Switch the stop function on or off with the [+] or [-] key.

Stop: On	The welding process is automatically stopped if the CP value is outside the tolerance range. This lock can only be released by pressing the Enter key [↵].
Stop: Off	The device continues to weld; the LED or the digital outputs show whether the welds are within or outside the tolerance range.

All rights reserved – Reprinting, in whole or in part, only with the approval of the manufacturer

Switch on process control (CP)

◆ Select the menu item with the [>] arrow key.

```
P:        3          1/1
Setup CP

Mode:  Input
Ref:   <05971>
Tol:   10%
Stop:  Off
CP:    <Off>
```

◆ Switch the process control on or off with the [+] or [-] key.

```
P:        3          1/1
Setup CP

Mode:  Input
Ref:   <05971>
Tol:   10%
Stop:  Off
CP:    <On>
```

◆ Confirm your settings with the Enter key [↵].

The settings are automatically saved.

©HBS Welding Systems GmbH

All rights reserved – Reprinting, in whole or in part, only with the approval of the manufacturer

The display shows you all set values:

P: 3		**279 Ws** **130 V**	
CP	I 5971	A	0
	M3 A2-50 Fe4.8vz		

CP	I	5971	A	xxxx
CP - On	Input mode	Ref. value	Current	value
	M3	A2-50 Fe4.8vz		
Switch on library	Stud diameter	Material of welding element Material of workpiece	Keys are not locked *)	One thyristor is switched on

*) Keys can be locked via the RS232 interface (remote control)

All rights reserved – Reprinting, in whole or in part, only with the approval of the manufacturer

12.3.8 Setup User

You can make the following user-defined settings in this submenu:

– Counter
– Language
– Diameter given in metric or standard units
– Date
– Time
– Baud rate for reading out the CP protocol

This is how you activate "Setup User":

◆ Press the [>] arrow key to call up the submenu.

◆ Now press the [>] arrow key until the "<" character appears in front of "Setup User".

```
Menu 1
        Library
        Setup CP
<       Setup User                    >
        Service
```

◆ Open the "Setup User" menu item with the Enter key [↵].

Page 1:

```
                1/2
Setup User

Counter         0
Language        english
mm/mil          metr.
Date            05.06.13
Time            14:48
                next >
```


©HBS Welding Systems GmbH
All rights reserved – Reprinting, in whole or in part, only with the approval of the manufacturer

◆ Select the "Continue" menu item with the [>] arrow key.

◆ Now open page 2 with the Enter key [+].

Page 2:

```
                2/2
Setup User

Com Rem         115200
Com CP          115200

                next >
```

◆ You can go back to page 1 with the [-] key.

Counter

◆ Select the menu item with the [>] arrow key.

```
                1/2
Setup User

Counter         <0>
Language        english
mm/mil          metr.
Date            05.06.13
Time            14:48
                next >
```

◆ Under this item, you can read out the number of welds performed.

◆ You can set the counter back to "0" with the [-] key.

All rights reserved – Reprinting, in whole or in part, only with the approval of the manufacturer

Language

◆ Select the menu item with the [>] arrow key.

```
                1/2
Setup User

Counter         0
Language        <english>
mm/mil          metr.
Date            05.06.13
Time            14:48
                next >
```

◆ Select the language in which the text should be output in the display with the [+] and [-] keys.

The following languages, e.g., are available [1]:

– German

– English

– Italian.

[1] further languages on request

Stud diameter in mm/mil

◆ Select the menu item with the [>] arrow key.

```
                1/2
Setup User

Counter         0
Language        english
mm/mil          <metr.>
Date            05.06.13
Time            14:48
                next >
```

◆ Set the measuring unit for your welding elements with the [+] and [-] keys:

metr. = mm

imper. = mil

©HBS Welding Systems GmbH

All rights reserved – Reprinting, in whole or in part, only with the approval of the manufacturer

Date

◆ Select the menu item with the [>] arrow key.

```
                1/2
Setup User

Counter         0
Language        english
mm/mil          metr.
Date            <05>  06.13
Time            14:48
                next >
```

◆ Select the day, month or year with the [>] arrow key.

◆ Set the current date with the [+] and [-] keys.

Time

◆ Select the menu item with the [>] arrow key.

```
                1/2
Setup User

Counter         0
Language        english
mm/mil          metr.
Date            05.06.13
Time            <14>  48
                next >
```

◆ Select the hours or minutes with the [>] arrow key.

◆ Set the current time with the [+] and [-] keys.

Date and time are stored with the help of a battery.

STOP

◆ **Inform your service department** if the date and time settings are not displayed correctly after switching on.

All rights reserved – Reprinting, in whole or in part, only with the approval of the manufacturer

Baud rate

Com Rem

◆ Select the "Continue" menu item with the [>] arrow key.

◆ Now open page 2 with the Enter key [+].

◆ Select the ”Com Rem” menu item with the [>] arrow key.

```
                2/2
Setup User

Com Rem         <115200>
Com CP          115200

                next >
```

◆ Here you can define the baud rate for controlling the stud welding unit remotely.

The standard setting is 115200.

The following settings are possible using the [+] and [-] keys:

9600, 19200, 38400, 57600 and 115200.

Com CP

◆ Select the “Com CP” menu item with the [>] arrow key.

```
                2/2
Setup User

Com Rem         115200
Com CP          <115200>

                next >
```

◆ Here you can define the baud rate for reading out the CP values of the stud welding unit.

The standard setting is 115200.

The following settings are possible using the [+] and [-] keys:

9600, 19200, 38400, 57600 and 115200.

◆ Confirm your settings with the Enter key [↵].

The settings are automatically saved.

©HBS Welding Systems GmbH

All rights reserved – Reprinting, in whole or in part, only with the approval of the manufacturer

12.4 Service Settings

12.4.1 Service

◆ Press the [>] arrow key to call up the submenu.

◆ Now press the [>] arrow key until the "<" character appears in front of "Service".

```
Menu 1
        Library
        Setup CP
        Setup User
<       Service                 >
```

◆ Open the "Service" menu item with the Enter key [↵].

The name of the stud welding unit used appears under this menu item.

The internal data can only be read out with a password.

```
Service         1/1

Type            CDMi 3202
AutomEn         On

Password?       0000
```

☞ **Settings or changes in this menu can only be performed by HBS service staff.**

◆ Leave this menu by holding down the [>] arrow key.

All rights reserved – Reprinting, in whole or in part, only with the approval of the manufacturer

12.4.2 Gun Test

This function is only displayed if a welding gun or welding head with solenoids is connected.

This is how you activate "Gun test":

- ◆ Press the [>] arrow key to call up the submenu.
- ◆ Now press the [>] arrow key until the "<" character appears in front of "Gun test".

```
Menu 1
        Library
        Setup CP
        Setup User
        Service
<       Gun test                    >
```

- ◆ Open the "Gun test" menu item with the Enter key [↵].

Lifting test (without contact)

You can now make an air shot and test the lift function.

```
                1/1

                Gun test

                Lifting test
```

Immersion time (with contact)

- ◆ Place the welding gun or welding head onto a workpiece connected to earth.
- ◆ Press the welding gun or welding head start button.
- ◆ This triggers the lifting process. (A weld is not triggered.)
- ◆ The display shows the immersion time from release of the solenoid until the workpiece touches the stud:

```
                1/1

                Gun test

Time:           6.19 ms
```

- ◆ Leave this menu by holding down the [>] arrow key.

©HBS Welding Systems GmbH

All rights reserved – Reprinting, in whole or in part, only with the approval of the manufacturer

With the indicated immersion time you have a comparison value for the dynamic behavior of the welding gun. This value helps to obtain reproducible welding results.

12.5 Performing the Welding Process

- **First set the necessary charging voltage and capacity.**
- Read and observe here *points 12.3.2 „Setting Charging Voltage“ and 12.3.3 „Setting Capacity“*.

Electric shock and light arc hazard

- Never touch the welding elements, chuck, retaining nut or electrically conductive parts in their vicinity during the welding process.

These parts are live.

- Never wear metal jewellery, even a wristwatch, on your body during the welding process.

This will help to avoid injuries and damage due to electric power or electromagnetic fields.

Electric shock and light arc hazard

- Stand on an insulated mat if you have to weld under the following conditions:

– In confined spaces with electrically conductive walls
– Under cramped conditions between or against electrically conductive parts
– Where there is limited mobility on electrically conductive parts
– In damp, wet or hot rooms.

All rights reserved – Reprinting, in whole or in part, only with the approval of the manufacturer

Danger of deflagration of explosive gases and substances

- Never weld in rooms with an explosion hazard.
- Never weld on vessels containing or that have contained substances
  - which are inflammable or promote combustion,
  - which may create health-endangering gases, fumes or airborne particulates,
  - or which could cause explosions.

Such work may only be carried out by welding specialists.

- Do not carry out such work if you have not been specially trained for it.

Risk of fire and burns due to glowing weld spatter

- Wear your personal protective equipment and
- your safety goggles with sight glass of protection class 2.
- Wear a protective helmet when welding over head.
- Remove all inflammable materials and liquids from the vicinity of the place of work before starting welding.
- Ensure that an approved fire extinguisher is available at the place of work.
- Observe furthermore your working instructions and the accident prevention regulations.

Glowing hot weld and liquid spatter occur during welding.

©HBS Welding Systems GmbH

All rights reserved – Reprinting, in whole or in part, only with the approval of the manufacturer

Danger due to noise

- Wear your ear protection during welding.
- Observe furthermore your working instructions and the accident prevention regulations.
- Inform colleagues working in the immediate vicinity accordingly before starting work.

A > 90 dB (A) bang can occur during the welding process.

- Ensure that the welding gun has been prepared in accordance with the corresponding operating manual.

- Check whether a welding element has been inserted into the welding gun.
- Insert a welding element, if necessary.

- Place the welding gun perpendicularly onto the workpiece as soon as the stud welding unit is ready for the welding process.
- Press the welding gun firmly with both hands against the workpiece until the welding gun attachment (spacer) is resting uniformly on the workpiece.
- Hold the welding gun firmly, steady and straight.
- Ensure that you do not touch any metal parts of the welding gun.
- Only now should you press the button of the welding gun.

The welding process is started.

- **Always pull the welding gun perpendicularly away from the welding element after the welding process**.

If you pull the welding gun away at an angle, you will strain the chuck and shorten its service life.

Risk of burns

The gun head becomes very hot during the welding process. The same applies to the welded element and the workpiece.

- Wear your proper protective clothing.

All rights reserved – Reprinting, in whole or in part, only with the approval of the manufacturer

- **Use only welding elements of one batch.**
- Pay strict attention not to mix welding elements from different batches.
- Carry out test welds again after a batch change.

Even the slightest changes to the geometry, in particular to the tip of the welding elements require different settings for the welding process.

- Now check the quality of the welded joint before inserting a new welding element and repeating the welding process.
- Work in accordance with the following *point 13*.

©HBS Welding Systems GmbH

All rights reserved – Reprinting, in whole or in part, only with the approval of the manufacturer

13 Checking the Quality of the Weld

You can check the quality of the weld by means of a visual inspection and a bending test.

The number and type or method of the tests to be performed and the acceptance criteria are defined in respective standards for quality demands.

13.1 Carrying out Visual Inspection

◆ Carry out a visual inspection on all welding elements.

Visual Inspection			
Condition		Possible cause	Corrective actions
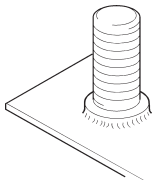	Good welded joint Low spatters around the weld without outer flaws The weld pool forms a collar around the flange of about 1 - 1.5 mm	Correct parameters	none
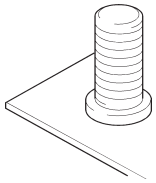	Gap between flange and workpiece	Weld energy too low Plunging speed too low Insufficient support of parent material	Increase weld energy Correct plunging speed Provide support
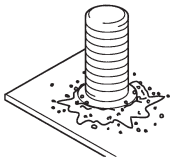	Many spatters around the weld	Weld energy too high Insufficient plunging speed	Reduce weld energy Increase plunging speed
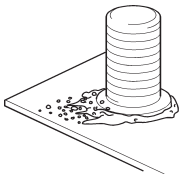	One-sided weld pool One-sided spatter collar Weld pool came out on one side	Effect of arc blow Unsymmetric ground connection Welding gun put at an angle	Take care for symmetrical ground connection Put welding gun vertically to the workpiece

All rights reserved – Reprinting, in whole or in part, only with the approval of the manufacturer

13.2 Carrying out Bending Test

You can purchase from HBS a bending device with inserts for various diameters of the welding elements.

The bending test serves as an easy work sample and as a check for the selected welding parameters. The welded joint is stressed by bending in a non-defined way.

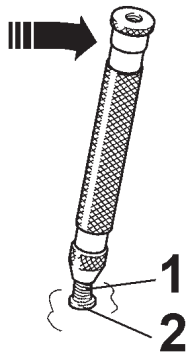

1 - Welding element

2 - Welded joint

◆ Place the bending device on the **welding element (1)** and

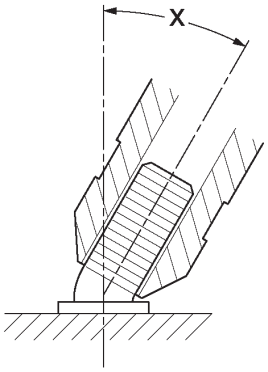

◆ bend the **welding element (1)** with the bending device once by 30° in any direction.

The bending test is passed if a crack or a fracture of the welded zone does not occur.

☞

◆ **Further tests should be conducted if the connection fails in the weld area.**

◆ In this case, **bend** the welding element exactly in the opposite direction by 30° towards the failing seam.

©HBS Welding Systems GmbH

All rights reserved – Reprinting, in whole or in part, only with the approval of the manufacturer

☞

◆ You don’t need to test all studs.

It is sufficient to carry out stud tests on several production samples that are picked at random.

Bending Test			
Type of fracture		Possible cause	Corrective actions
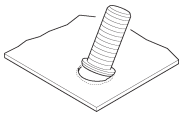	Base material buckling	Correct parameters	none
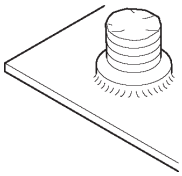	Fracture in welding element above flange	Correct parameters	none
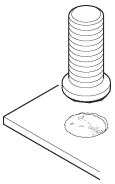	Fracture in the weld metal	Weld energy too low Plunging speed too low Unsuitable stud/base material combination	Increase weld energy Increase plunging speed Replace welding element or workpiece

If the strength of the joint is inadequate, then:

◆ check the setting of the stud welding unit.

◆ check whether the surface of welding element and base material are clean and electrically conductive.

They must be free from scale, oil, paint, oxide layers.

◆ Grind off hardened workpiece surfaces (e.g. roll hardening).

◆ Check the piston of the welding gun for ease of movement.

All rights reserved – Reprinting, in whole or in part, only with the approval of the manufacturer

13.3 Optimisation of Welding Parameters

- **As first step, conduct the tests outlined under points 13.1 and 13.2.**
- As second step optimise the welding parameters according to the table under *point 12.2 Determining the Charging Voltage*.

- Optimise the welding parameters of the stud welding unit.
- Check the settings of the welding gun.
- If necessary re-adjust the lift and spring pressure.

- **Refer here to the operating manual of your welding gun.**

©HBS Welding Systems GmbH

All rights reserved – Reprinting, in whole or in part, only with the approval of the manufacturer

13.4 Blowing Effect and Remedies

With asymmetric ground connections, different material distributions or when welding at the edge of a workpiece a "blowing effect" can occur. This is an undesirable deflection of the electric arc. This results in uneven melting of the stud material, in increased poring and undercuts in the welding area.

The blowing effect is proportional to the current amperage and can be influenced by symmetrical connection of the ground terminals, by connecting compensating grounds or (on welding guns with external welding cable) by turning the welding gun about its vertical axis.

Blowing effect	
Cause	Remedy
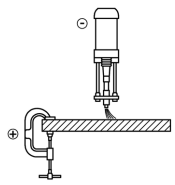	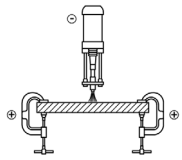
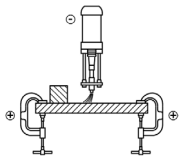	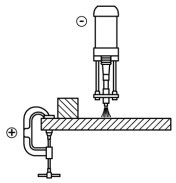
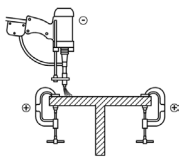	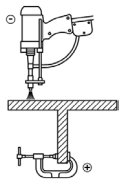

All rights reserved – Reprinting, in whole or in part, only with the approval of the manufacturer

13.5 Analysis of Parameters via RS 232 Interface

Via the serial interface **X4** of the stud welding unit, the actually recorded data can be output for a potential storage in ASCII format.

A data cable is required which can be ordered as a consumable at HBS (Order No. 80-50-1243).

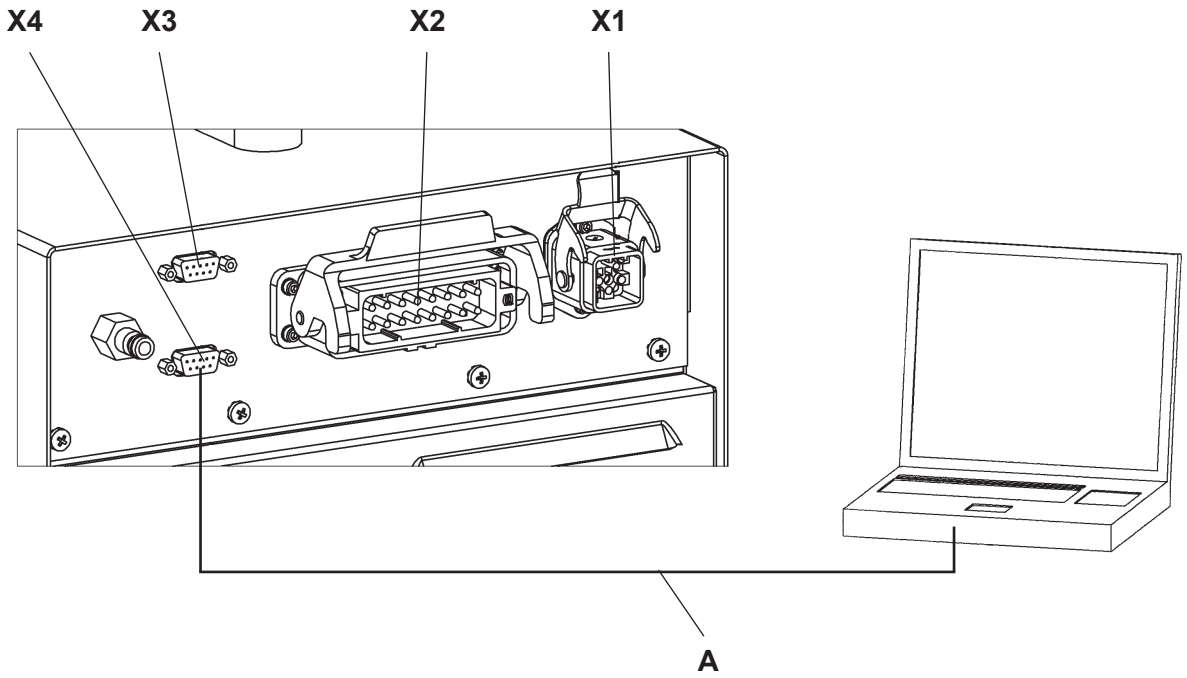

X3 - RS 232 remote control

X4 - RS 232 read out

A - Data cable, Order No. 80-50-1243

This data collection can be evaluated by a terminal programme (e.g. Hyper Terminal).

Connection settings of the serial interface at a PC or notebook:

Bits per second:	115 200
Data bits:	8
Parity:	None
Stop bits:	1

©HBS Welding Systems GmbH

All rights reserved – Reprinting, in whole or in part, only with the approval of the manufacturer

Transmission of Recognized Data With Microsoft® Hyper Terminal

Microsoft® HyperTerminal is a tool to transfer performance data directly onto your PC or notebook. The programme is automatically integrated into Microsoft Office until version 2007.

For later versions of Microsoft Office, such as Office 2010, the programme Hyper-Terminal can be downloaded free of charge for your personal use.

- Switch on the controlling function of the output voltage.
- Proceed as described in section *„12.3.7 Setup CP“*.

Any data can individually be processed in the window Microsoft® Hyper Terminal.

- Link the data cable (Order No. 80-50-1243) to the serial sleeve of the stud welding unit and to the serial sleeve (com1 or com2) of a PC’s/Laptop.

All rights reserved – Reprinting, in whole or in part, only with the approval of the manufacturer

◆ Now call up the Hyper terminal:

Start

Programs

Accessory

Communication

Hyper Terminal

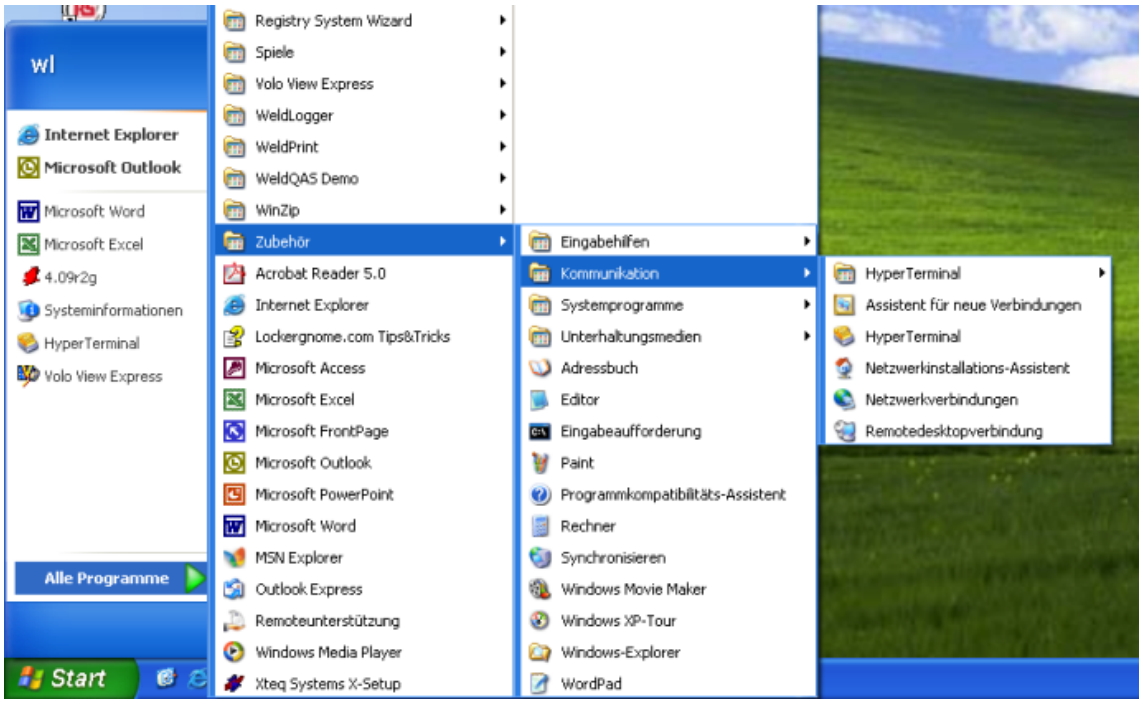

©HBS Welding Systems GmbH

All rights reserved – Reprinting, in whole or in part, only with the approval of the manufacturer

- Name the connection (e.g. the company name or a date - however without dots).
- Select any icon.
- Confirm with OK.

- Define the interface (com1 or com2 at the PC).
- Confirm with OK.

All rights reserved – Reprinting, in whole or in part, only with the approval of the manufacturer

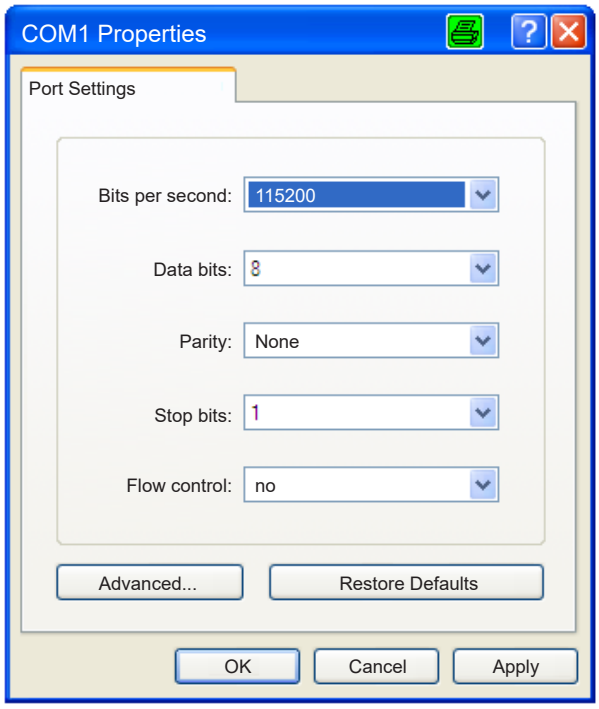

◆ Define the connection settings:

Transmission rate: (Bits per second)

– CDMi and IT stud welding units 115200

– CDM stud welding units 19200

◆ Confirm with OK.

©HBS Welding Systems GmbH

All rights reserved – Reprinting, in whole or in part, only with the approval of the manufacturer

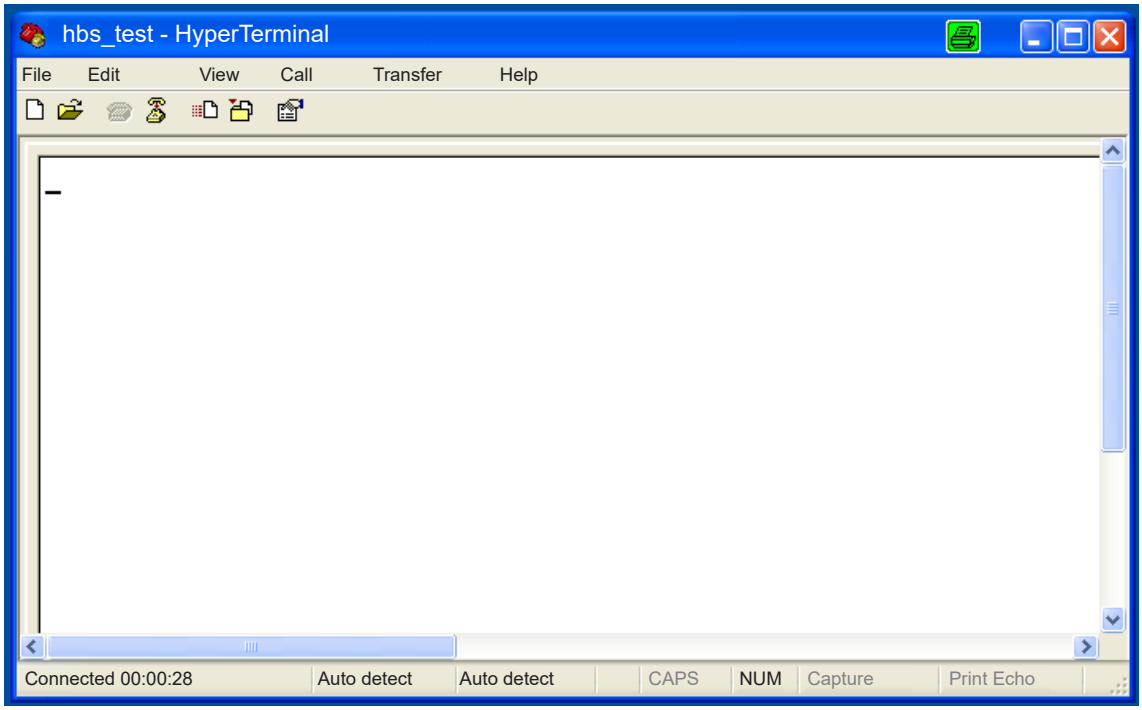

◆ Do not forget to save data.

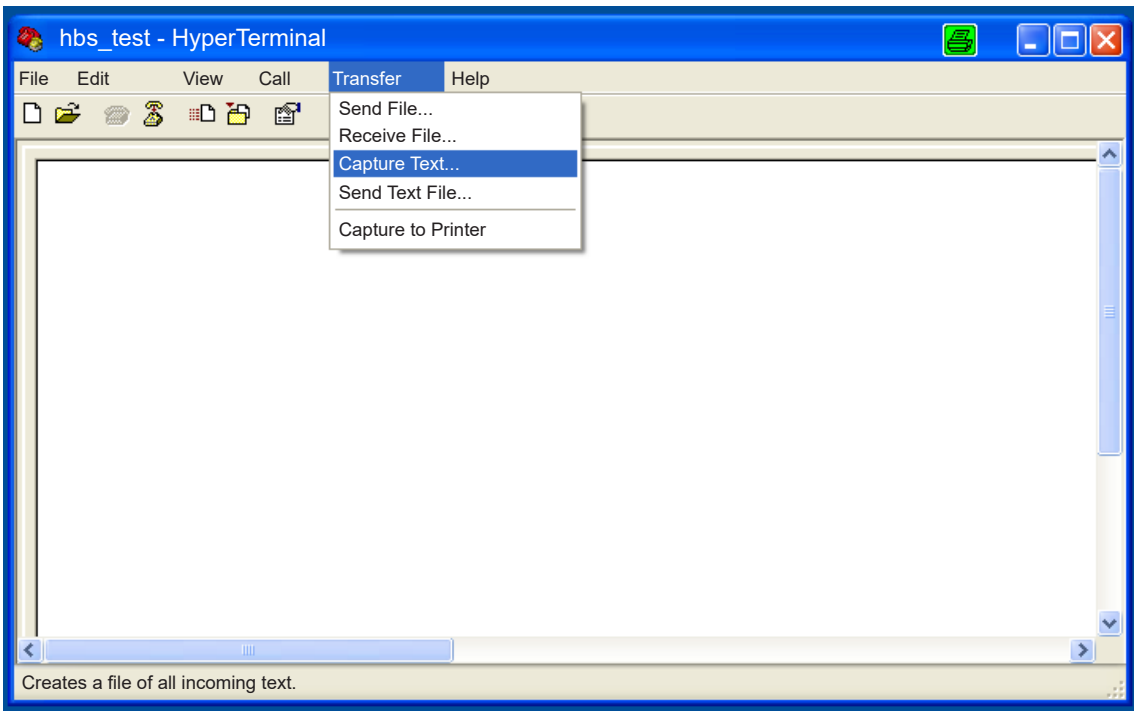

All rights reserved – Reprinting, in whole or in part, only with the approval of the manufacturer

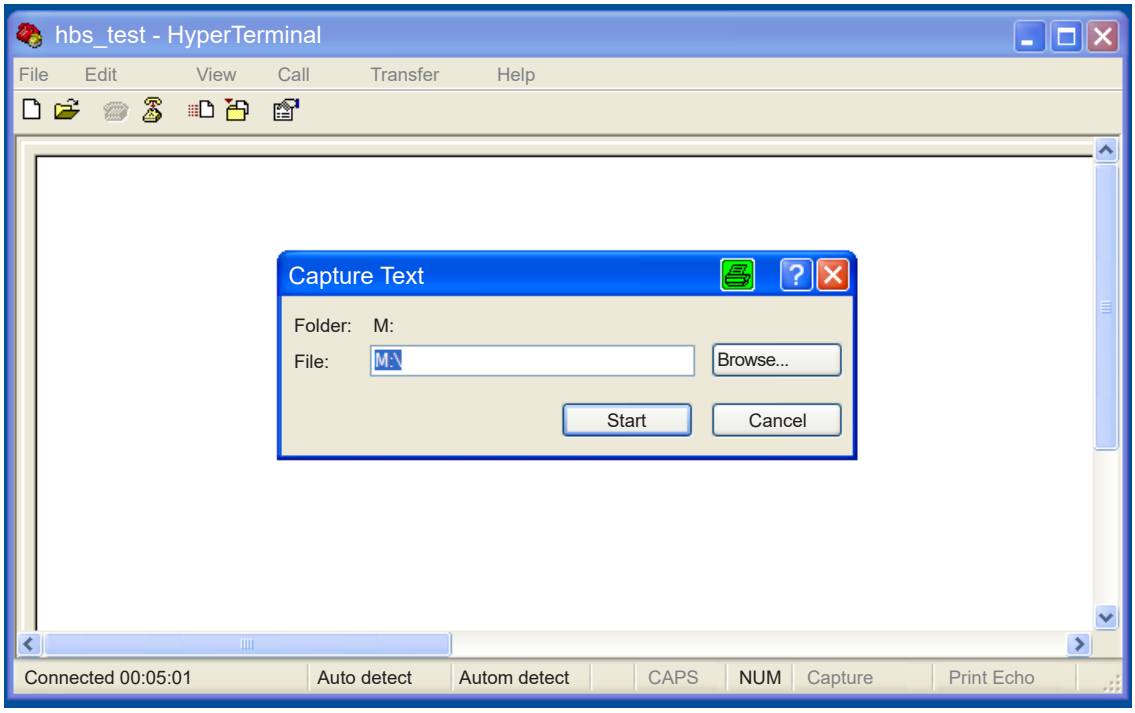

- Give a file name.
- Confirm with start.

Example for data output at serial output (e. g. Microsoft® Hyper Terminal):

Output serial interface CDMi units

No.	Date	Time	Prg./ Libr.-Mode	Prg.- No.	Charging voltage	Capacity	Mode	Ref-CP	Tolerance	CP	Status
29	06.06.2013	08:52:28	P	1	91 V	B1+2	R	Ref8	T10%	A 28271	
30	06.06.2013	08:52:34	P	1	91 V	B1+2	R	Ref7	T10%	A 28038	
31	06.06.2013	08:52:40	P	1	91 V	B1+2	R	Ref6	T10%	A 28025	
32	06.06.2013	08:52:46	P	1	91 V	B1+2	R	Ref5	T10%	A 28064	
33	06.06.2013	08:52:52	P	1	91 V	B1+2	R	Ref4	T10%	A 27986	
34	06.06.2013	08:52:58	P	1	91 V	B1+2	R	Ref3	T10%	A 28002	
35	06.06.2013	08:53:04	P	1	91 V	B1+2	R	Ref2	T10%	A 28038	
36	06.06.2013	08:53:10	P	1	91 V	B1+2	R	Ref1	T10%	A 28040	
37	06.06.2013	08:53:16	P	1	91 V	B1+2	R	R 28034	T10%	A 28025	OK
38	06.06.2013	08:53:22	P	1	91 V	B1+2	R	R 28034	T10%	A 28035	OK
39	06.06.2013	08:53:28	P	1	91 V	B1+2	R	R 28034	T10%	A 28042	OK
40	06.06.2013	08:53:28	P	1	91 V	B1+2	R	R 28034	T10%	A 28042	OK
41	06.06.2013	08:53:34	P	1	91 V	B1+2	R	R 28034	T10%	A 28045	OK

©HBS Welding Systems GmbH
All rights reserved – Reprinting, in whole or in part, only with the approval of the manufacturer

13.6 Remote Control via RS 232 Interface

You can control the stud welding unit via the **X3** serial interface.

A data cable is required which can be ordered as a consumable at HBS (Order No. 80-50-1243).

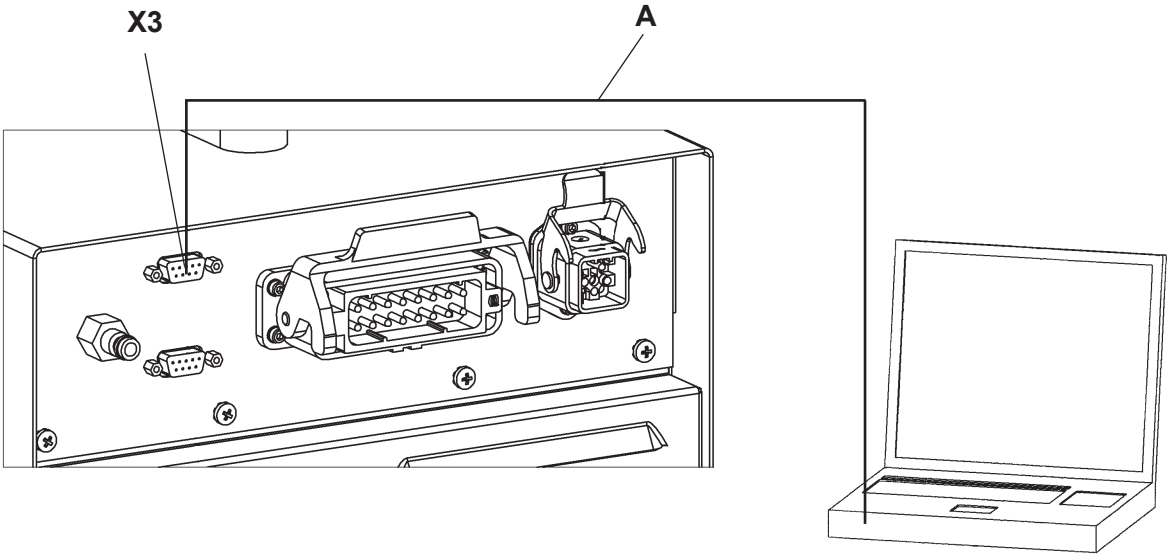

X3 - RS232 remote control

A - Data cable, Order No. 80-50-1243

This data can be evaluated via a terminal programme (e.g. Hyper Terminal).

Connection settings of serial interface on the PC or laptop:

Bits per second:	115 200
Data bits:	8
Parity:	None
Stop bits:	1

All rights reserved – Reprinting, in whole or in part, only with the approval of the manufacturer

If the interface is set correctly, you will get a display of the device type and the current software when the stud welding unit is switched on.

The **HELP** and **ENTER** command shows you the current command set.

If you only enter the command and press ENTER, the current state is returned.

Enter **PROG** and confirm with **ENTER**; the stud welding unit writes back the programme number for the programme currently in use.

Up to 15 different programmes can be used. Enter **PROG=3** and **ENTER**; the stud welding unit switches to programme 3.

The following command set is available in ASCII format:

PROG:	Programme	1 to 15	
BATT: 0 or 1	Capacity switching	0 = 66 000 µF 1 = 132 000 µF	
VOLT:	Charging voltage	50 V to 220 V	
AUTO:	Blow time	0 ms to 5 000 ms	
LOCK:	Key lock (key lock ON: no key function in the front on the display)	LOCK=0 key lock is OFF LOCK=1 key lock is ON	
LANG: 0 to 2	Language	0 = German 1 = English 2 = French	
STMA:	Only query whether welding gun or welding head with solenoid is connected		
MAOF:	Solenoid control can be switched off	MAOF = 0 Solenoid is being controlled	
TIME:	Time setting	hh:mm:ss	
DATE:	Date setting	dd.mm.yy	
BMAT: 0 to 3	Stud material setting	0 = Al99,5 2 = S235	1 = AlMg3 3 = A2-50
BDIA: 0 to 5	Stud diameter setting	0 = M3 2 = M5 4 = M8	1 = M4 3 = M6

©HBS Welding Systems GmbH

All rights reserved – Reprinting, in whole or in part, only with the approval of the manufacturer

BIBL: 0 or 1	Switch library on or off	0 = OFF 1 = ON
CPMO: 0 or 1	CP mode setting	0 = Input 1 = Ref
CPRE:	Entry of reference value	from 1 to 65 000
CPTO:	Entry of tolerance in %	from 1 to 99
CPST:	Switch stop function in CP mode on or off	0 = OFF 1 = ON
CPON:	Switch CP mode on or off	0 = OFF 1 = ON
CPQU:	Acknowledge stop function in CP mode	CPQU=1 Fault is acknowledged
CPAK:	Read out current CP value	CPAK=1 Value is read

Example: entry of new charging voltage 150 V

VOLT=150 and ENTER

All rights reserved – Reprinting, in whole or in part, only with the approval of the manufacturer

14 Troubleshooting

Danger from insufficiently qualified operating personnel

- Carry out only the work described here on your stud welding unit or stud welding gun.
- Repairs may only be carried out by appropriately qualified personnel.
- Inform your dealer or your maintenance department.

Fault	Possible cause	Fault localisation	Fault remedy	Performance
Light signal of mains switch does not light	Mains socket defective	Check mains socket*)	Replace mains socket*)	Qualified specialists
	Mains cable broken	Check mains cable*)	Replace mains cable*)	Qualified specialists
No LED display at the front	Fuse F2 1 AF defective	Check mains fuse*)	Replace mains fuse F2 on the transformer of the stud welding unit*)	Qualified specialists
	Leads interrupted	Check leads*)	Replace leads*)	Qualified specialists
No display	No ground connection	Check ground connection on workpiece	Tighten ground connection properly	Trained personnel
	Gun not connected	Check gun connection	Connect gun properly	Trained personnel
	Transition resistance (between stud and workpiece) too high	Check material surface	Clean or grind material surface	Trained personnel
	Ground cable broken	Check ground cable*)	Replace ground cable*)	Qualified specialists
	Welding gun cable broken	Check welding gun cable*)	Replace welding gun cable*)	Qualified specialists
No display	Defective connecting line of welding gun	Check function of connecting line*)	Replace connecting line*)	Qualified specialists
	Welding gun trigger button defective	Check control cable for electrical flow with triggered start button*)	Replace welding gun trigger button*)	Qualified specialists
	Control cable broken	Check control cable for electrical flow*)	Replace control cable*)	Qualified specialists

©HBS Welding Systems GmbH

All rights reserved – Reprinting, in whole or in part, only with the approval of the manufacturer

Fault	Possible cause	Fault localisation	Fault remedy	Performance
Gun does not lift, in spite of , and	No lift adjusted	Check settings of welding gun	Modify set parameters	Trained personnel
	Short circuit of solenoid circuit of the gun	Check resistance value at control cable connector (18 Ω to 22 Ω) between Pin 1 and Pin 2*)	Replace control cable connector, control cable and solenoid*)	Qualified specialists
	Solenoid defective	Check solenoid (18 Ω to 22 Ω)*)	Replace solenoid*)	Qualified specialists
No display	Magnetic circuit interrupted	Check resistance value at control cable connector (18 Ω to 22 Ω) between Pin 1 and Pin 2*)	Replace solenoid or control cable*)	Qualified specialists

Work marked with *) may only be carried out by qualified electricians!

- Please contact our Service department if none of the measures described remedies the situation.
- Please use the form „Service & Support“ in the annex to send in the stud welding unit.

All rights reserved – Reprinting, in whole or in part, only with the approval of the manufacturer

Fault codes

Command	Indicator display	Description
Stop	Pushbuttons	A pushbutton in the front plate is stuck
Stop	Rel.clos	N/O relay contact not in correct position
Stop	Rel.open	N/C relay contact not in correct position
Stop	RLR	Reload relay defective
Stop	RLT	Reload transistor defective
Stop	TO Load	Charging time of the capacitor battery too long
Stop	TO RL	Recharging time of capacitor battery too long
Stop	SCR	Thyristor fault
Caution	Temp. LT	Temperature on loading unit too high. Wait until the charging unit has cooled off.
Caution	Temp	Interior temperature of stud welding unit too high. Wait until the stud welding unit has cooled off.

- Switch off the device when a fault code with “Stop” is displayed.
- Switch the device back on after approx. 5 minutes.
- Please contact our service department if the fault remains.
- Please use the form „Service & Support“ in the annex to send in the stud welding unit.

©HBS Welding Systems GmbH
All rights reserved – Reprinting, in whole or in part, only with the approval of the manufacturer

15 Shutting Down

- Switch off the stud welding unit.
- Pull out the mains plug.
- Disconnect the control cable and welding cables from the stud welding unit.
- Protect the stud welding unit and its components against the ingress of liquids and foreign matter.

All rights reserved – Reprinting, in whole or in part, only with the approval of the manufacturer

16 Maintenance and Care

Electric shock hazard

- Always switch off the stud welding unit before starting maintenance and care work.
- Pull out the mains plug.

Danger from insufficiently qualified operating personnel

- Carry out only the work described here on your stud welding unit.
- Repairs may only be carried out by appropriately qualified personnel.
- Inform your dealer or your maintenance department.

16.1 Cleaning

- Clean the surface of the stud welding unit with a slightly damp cloth, when necessary.
- Add a little household detergent to the cleaning water.

- **Do not use solvents for cleaning.**

These can damage the surface of your stud welding unit.

The inside of the stud welding unit must be cleaned at least every three months.

- Inform your dealer or your maintenance department.

©HBS Welding Systems GmbH

All rights reserved – Reprinting, in whole or in part, only with the approval of the manufacturer

16.2 Inspection and Tests

- **Inspect the condition of the mains cable.**
- Inform your dealer or maintenance department if you discover any damage.

- Check whether the readings on the display of the stud welding unit are still legible before starting work.
- Clean display and control panel in the event of soiling.

- Replace any removed or damaged signs:

Before opening machine disconnect mains

Observe the operating manual

Warning of electric shock hazard

☞ We recommend that the stud welding unit be subjected to an annual periodic inspection in compliance with the standard IEC 60974-4 “Periodic inspection and testing”.

Please contact your customer advisor for further information.

All rights reserved – Reprinting, in whole or in part, only with the approval of the manufacturers

17 Storage

- Store the stud welding unit in a safe and dust-free location when not in use.
- Protect the stud welding unit from moisture and metallic contamination.

- Store the stud welding unit only under the following ambient conditions.

Storage temperature:

23 °F to 122 °F (-5 °C to +50 °C)

Relative humidity:

0 % - 50 % at 104 °F (+40 °C)
0 % - 90 % at 68 °F (+20 °C)

18 Disposal

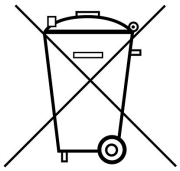

- Dispose of the stud welding unit only via the manufacturer or a specialist disposal company.
- Never dispose of the stud welding unit in the domestic refuse.

©HBS Welding Systems GmbH
All rights reserved – Reprinting, in whole or in part, only with the approval of the manufacturer

Service & Support

With the return please attach a copy of the filled out form together with the repair number given by HBS! Repairs without repair number will not be processed.

Repair number
(given by HBS)

_____

Company: _____
Name / Surname: _____
Street: _____
City, State and ZIP/Postcode: _____
Country: _____
Phone & Fax: _____
E-mail address: _____

Stud welding unit / stud welding gun type of model: _____
Serial number: _____
Date of purchase: _____
Purchased at distributor: _____

Detailed descriptions of errors: _____

Service & Support may be done up to the value of EUR _____ without quotation: ☐ Yes ☐ No

Could you find any damage / burn marks

on the cables: ☐ Yes ☐ No

on chucks: ☐ Yes ☐ No

Are all plug and screw connections tightly fastened *: ☐ Yes ☐ No

Are there any burn marks on plug or screw connections: ☐ Yes ☐ No

Is there any other visual damage (e.g. cracks, dents): ☐ Yes ☐ No

Have you checked the fuses: ☐ Yes ☐ No

Default on the display of the stud welding unit:

ARC / IT					CD / CDM / SC					
○	⊗				●		⊗			**

Which LED´s are illuminated (please mark with a cross)?

Please e-mail or fax this form to service@hbs-info.de or fax: +49 8131 511-100.
In case a repair is necessary a repair number will be given!

* See also operating manual chapter „Connection“
** Doesn´t light when using a contact welding gun

All rights reserved – Reprinting, in whole or in part, only with the approval of the manufacturer

Index

A

accessories 15
adaptor 33
airborne particulates 9, 28
arrow keys 22
automatic mode 34
automatic welding head 14

B

bang 10, 75
basic configuration 15
basic settings 49
batch 76
bending device with inserts 78
bending test 78
blowing effect 81

C

capacitor 14, 25, 27
charging device 19
charging voltage 45
checking the quality 77
cleaning 96
clothing, non-flammable 10
compressed air connection 34
contact, external 40
contact stud welding 25
control 19
control cable 32
control panel and display 21
CP control 58

D

damage to the plug connectors 32, 36
danger from incorrect use 8
data cable 15, 82, 89
delivery condition 48
determination of charging voltage 44
disposal 98

E

ear protection 12
electrical hazards 12
electric arc 14, 25, 27
electromagnetic fields 12
EMF directive, safety notices 11
external contact scan 40
external welding start 42

F

fire extinguisher 10, 74
fire extinguisher, approved 28
fire hazard 10
form „Service & Support“ 93, 94, 99
full-ear hearing protection 10
fully automatic stud feeder 33
fumes, harmful to health 9, 28
fuse 37

G

gap stud welding 26, 27
glossary 14
goggles with visor 10
ground cable 36
ground clamps 36

H

hazards for the machine 12
hazards for the operator 12
heart pacemaker 9, 12, 43
helmet 10

I

ignition tip 25, 27
immersion time 72
intended use 17, 30

L

library mode 22, 55
lift 27
lifting test 72
liquids, inflammable 28
loading control 40

M

main assemblies 19
mains power supply 37
mains switch 44
mains voltage 37
maintenance and care 96
maintenance and care, regular 96
materials, inflammable 28
Microsoft Hyper Terminal 83

O

operating manual 15
oxidizing materials 26

©HBS Welding Systems GmbH

All rights reserved – Reprinting, in whole or in part, only with the approval of the manufacturer

P

plunging speed 25
protective apron. 10
protective equipment 10
protective equipment, personal 12
protective gloves 10

R

rectifier. 14
reference value 59
risk of burns 74
risk of falling. 28
risk of fire 74
risk of tripping 28
RS 232 interface 82, 89

S

safety goggles 12
safety goggles with sight glass 10
safety precautions 8
scope of supply 15
select mode 58
setting options 48
shutting down 95
spacer 75
speed. 27
storage. 98
storage temperature 98
stud feeder. 14
stud feeding time 54
stud welding gun 14
stud welding system 14
stud welding unit 14
substances, explosive 28
surface of base material 79
surface of welding element 79
switch on the stud welding unit 44
symbols used. 12

T

test welding 44
tolerance value 59, 62
troubleshooting 92
type plate. 20, 37

V

vessels, welding work on. 74
visual inspection 77

W

warranty entitlement 18
welding capacitors. 19
welding current cable. 32
welding element. 14
welding energy 25, 27
welding gun attachment. 75
welding parameters 14, 30
welding process. 25
welding thyristor. 19
workpiece 14

All rights reserved – Reprinting, in whole or in part, only with the approval of the manufacturer

©HBS Welding Systems GmbH

All rights reserved – Reprinting, in whole or in part, only with the approval of the manufacturer

HBS Welding Systems GmbH
Felix-Wankel-Strasse 18 • 85221 DACHAU • GERMANY
Phone +49 8131 511-0 • E-mail sales@hbswelding.systems

www.hbswelding.systems