Visar 650

Stud Welding Unit

93-60-0650

HBS EFFICIENT TECHNOLOGY

Operating Manual

2024

After-sales service for Germany:

HBS Bolzenschweiss-Systeme GmbH & Co. KG
Felix-Wankel-Strasse 18
85221 DACHAU
GERMANY

Phone **+49 8131 511-0**
E-mail **sales@hbswelding.systems**
Web **www.hbswelding.systems**

Visar 650 Operating Manual Issue 2024-11 Order No. E-BA 93-60-0650

Translation of the Original Operating Manual

Please keep the manual in a safe place for future reference.

Transmission and duplication of this document, dissemination and notification of the contents are not permitted unless expressly approved.

All rights, errors and technical amendments reserved.

© HBS Bolzenschweiss-Systeme GmbH & Co. KG

Dear Customer,

Many thanks for buying a stud welding machine from HBS Bolzenschweiss-Systeme.

We at HBS wish you success at all times when working with this stud welding machine.

The high level of quality of our products is guaranteed by ongoing further development in the design, equipment and accessories. This may result in differences between the present operating manual and your product. No claims can therefore be derived from the data, illustrations and descriptions.

We have compiled the data and information in this reference work with the greatest care, and have made every effort to ensure that the information contained in this manual was correct and up-to-date at the time of delivery. We can nevertheless give no guarantee for an absolutely error-free document.

Should you discover any errors or unclear points when reading this operating manual, please do not hesitate to contact us.

We would also be grateful for any feedback should you have any suggestions or complaints to make about our product.

HBS Bolzenschweiss-Systeme GmbH & Co. KG

Felix-Wankel-Strasse 18

85221 Dachau

GERMANY

All rights reserved – Reprinting, in whole or in part, only with the approval of the manufacturer

Table of Contents

1 Important Safety Precautions 6

2 Symbols and Terms Used 10

3 Scope of Supply 13

4 Accessories 13

5 Technical Data 15

6 Intended Use 16

7 Warranty 17

8 Components of the Stud Welding Unit 18

8.1 Main Assemblies 19
8.2 Operation Panel and Display 21
8.3 Mains Switch 22

9 Welding Process 23

Drawn-Arc Stud Welding 23

10 Preparing Workplace and Welding Process 27

10.1 Preparing Surfaces 28
10.2 Checking the Stud Welding Gun 29

11 Connection 30

11.1 Connecting the Welding Gun to the Stud Welding Unit 31
11.2 Connecting the Ground Cable 31
11.3 Connecting the Stud Welding Unit to the Mains Supply 33

©HBS Bolzenschweiss-Systeme GmbH & Co. KG
All rights reserved – Reprinting, in whole or in part, only with the approval of the manufacturer

12 Welding 34

12.1 Switching on the Stud Welding Unit 35

12.2 Determining the Welding Time and the Welding Current 35

12.3 Setting the Welding Parameters 38

Adjusting the Welding Time 38

Adjusting the Welding Current 38

12.4 Performing the Welding Process 39

12.5 Sleep Mode 42

13 Checking the Quality of the Weld 43

13.1 Carrying out Visual Inspection 43

13.2 Carrying out Bending Test 44

13.3 Optimisation of Welding Parameters 46

13.4 Blowing Effect and Remedies 47

14 Troubleshooting 48

15 Shutting Down 50

16 Maintenance and Care 51

16.1 Cleaning 51

16.2 Inspection and Tests 52

17 Storage 53

18 Disposal 53

EC Declaration of Conformity 54

Service & Support 55

Index 56

All rights reserved – Reprinting, in whole or in part, only with the approval of the manufacturer

1 Important Safety Precautions

The target group for this manual are qualified personnel who in view of their technical training, know-how and experience and knowledge of applicable regulations are able to assess the work assigned to them and recognise potential hazards.

Danger from incorrect use

- Use the stud welding machine only for the purpose described in this manual.

Otherwise you may endanger yourself or damage the stud welding machine.

You endanger yourself and others if you operate the stud welding machine incorrectly or fail to observe the safety precautions and warnings. This can lead to serious injury or extensive material damage.

Danger for unauthorised operating personnel

- Work with the stud welding machine only when
  - You are appropriately trained, instructed and authorised to do so, and
  - You have read and completely understood this operating manual.
- Never work with the stud welding machine when you are under the influence of
  - Alcohol,
  - Drugs or
  - Medication.

Danger from unauthorised modifications

- Never modify the stud welding machine or parts thereof without obtaining a clearance certificate from the manufacturer.

You will otherwise endanger yourself. This can lead to serious injury or extensive material damage.

©HBS Bolzenschweiss-Systeme GmbH & Co. KG

All rights reserved – Reprinting, in whole or in part, only with the approval of the manufacturer

Life-threatening danger for wearers of active implanted cardiac devices

Danger for workers at particular risk within the meaning of the EMF directive

Persons at particular risk within the meaning of the EMF directive are:

– Workers with active implanted medical devices
– Workers with passive implanted medical devices that contain metal
– Workers with medical devices worn on the body
– Pregnant workers.

◆ Never operate the stud welding machine if you are among the group of workers at particular risk within the meaning of the EMF directive.
◆ In this case, never remain in the vicinity of the stud welding machine during welding.
◆ Never operate the stud welding machine if persons are located nearby who are among the group of workers at particular risk within the meaning of the EMF directive.

Strong electromagnetic fields are produced in the vicinity of the stud welding machine during welding. These fields can adversely affect the function of medical devices as well as the course of a pregnancy.

Danger from fumes and airborne particulates

◆ Switch on the welding fume extractor at the place of work.
◆ Ensure that the room is well ventilated.
◆ Never weld in rooms with a ceiling height of less than 3 m.
◆ Observe furthermore your working instructions and the accident prevention regulations.

This will help to avoid health damage due to fumes and airborne particulates.

All rights reserved – Reprinting, in whole or in part, only with the approval of the manufacturer

Danger from glowing metal spatter (fire hazard)

Glowing hot weld spatter and liquid splashes, flashes of light and a loud bang > 90 dB (A) must be anticipated during stud welding.

- Inform colleagues working in the immediate vicinity accordingly before starting work.
- Ensure that an approved fire extinguisher is available at the workplace.
- Do not weld when wearing working clothes soiled with flammable substances such as oil, grease, petroleum, etc.
- Wear your proper protective equipment, such as:
  - Protective gloves in accordance with the relevant standard,
  - Non-flammable clothing,
  - A protective apron over your clothing,
  - Full-ear hearing protection in accordance with the relevant standard,
  - A safety helmet when welding above your head,
  - Safety shoes,
  - Safety goggles with sight glass of protection level 2 in compliance with the applicable standards and do not look directly into the electric arc.
- Remove all flammable materials and liquids from the vicinity of the work area before starting welding.
- Weld at a safe distance from flammable materials or liquids. Select a safety distance large enough to ensure that no danger can arise from weld spatter.

Protection of the stud welding unit

- Protect the stud welding machine against the ingress of foreign matter and liquids caused by cutting or grinding work in the vicinity of your work area.

This will help to prolong the service life of your stud welding machine.

©HBS Bolzenschweiss-Systeme GmbH & Co. KG

All rights reserved – Reprinting, in whole or in part, only with the approval of the manufacturer

Safety notices in accordance with EMF directive 2013/35/EU

Currents flowing through electrical conductors during stud welding cause electric and magnetic fields that can occur, in particular, near the hand-held welding guns, the welding arrangement (e.g., welding cables) and the welding power sources.

Due to the high currents, high EMF exposures may occur.

Danger for workers at particular risk within the meaning of the EMF directive

Persons at particular risk within the meaning of the EMF directive are:

- Workers with active implanted medical devices
- Workers with passive implanted medical devices that contain metal
- Workers with medical devices worn on the body
- Pregnant workers.

Strong electromagnetic fields are produced in the vicinity of the stud welding machine during welding.

To reduce the danger posed by electromagnetic fields, we recommend, among other things, the following rules of conduct:

◆ Lay all cables as close together as possible.

For proper bundling and safeguarding of the cables, HBS offers protective tubes in various sizes.

◆ Do not position yourself between the welding cables.

◆ Only lay the cables to one side and position them as far as possible from the operating personnel.

◆ Do not loop the cables over your body, especially not at head level.

◆ Completely unwind the welding cables.

◆ Use the shortest possible welding cables.

◆ Place portable welding power sources as far away as possible while welding.

◆ If possible, do not operate welding power sources in the immediate vicinity of other persons, do not sit directly next to the welding power source while working and do not lean against it.

◆ In addition to these safety notices, also observe your work instructions and accident prevention regulations.

All rights reserved – Reprinting, in whole or in part, only with the approval of the manufacturer

2 Symbols and Terms Used

The symbols used in this operating manual have the following meanings:

Danger

Warns you of hazards that can lead to **injury of persons** or to **considerable material damage.**

Caution

Problems in operating **may occur** if this information **is not observed.**

No access for people with active implanted cardiac devices

No access for persons with implants made of metal

No access for pregnant women

Danger

Warns you of **electrical** hazards

Danger

Warns you of **electromagnetic fields** that can be generated during welding

These symbols prompt you to wear **personal protective equipment when working with the stud welding unit**.

This symbol prompts you to wear **ear protection**. **A loud bang > 90 dB (A) can occur during the welding process.**

©HBS Bolzenschweiss-Systeme GmbH & Co. KG

All rights reserved – Reprinting, in whole or in part, only with the approval of the manufacturer

☞ **Tip**

Cross-reference to **useful information** on the use of the stud welding machine

Cross-references in this operating manual are marked with this symbol or ***are printed in italics***

Fire hazard

Have a suitable fire extinguisher for the working area ready before starting work.

◆ **Work instruction**

– **List**

©HBS Bolzenschweiss-Systeme GmbH & Co. KG

All rights reserved – Reprinting, in whole or in part, only with the approval of the manufacturer

Glossary

Automatic welding head:	Device for welding of welding elements
Capacitor:	Component for storage of electrical energy.
Electric arc:	Autonomous gas discharge between two electrodes when the current is high enough. A whitish light is emitted in the process. The electric arc allows very high temperatures to be generated.
Rectifier:	Electrical component that converts alternating voltage into direct voltage
Stud feeder:	Device for automatic feeding of welding elements
Stud welding gun:	Device for welding of welding elements
Stud welding system:	Stud welding unit including stud welding gun or welding head
Stud welding unit:	Device for provision of the electrical energy for stud welding
Thyristor:	Electronic component for contact-free switching of high currents; switching takes place via the control input
Welding element:	Component such as stud or pin that is welded to the workpiece
Welding parameters:	Mechanical and electrical settings at the stud welding gun or welding head and at the stud welding unit (e.g. spring force, charging voltage)
Workpiece:	Components such as sheet metal or tubes to which the welding elements are to be fastened

©HBS Bolzenschweiss-Systeme GmbH & Co. KG

All rights reserved – Reprinting, in whole or in part, only with the approval of the manufacturer

3 Scope of Supply

The **basic configuration** of your stud welding unit contains the following parts:

No. of pieces	Part	Type	Order No.
1	Stud welding unit	Visar 650	93-60-0650
1	Operating manual	Visar 650	E-BA 93-60-0650

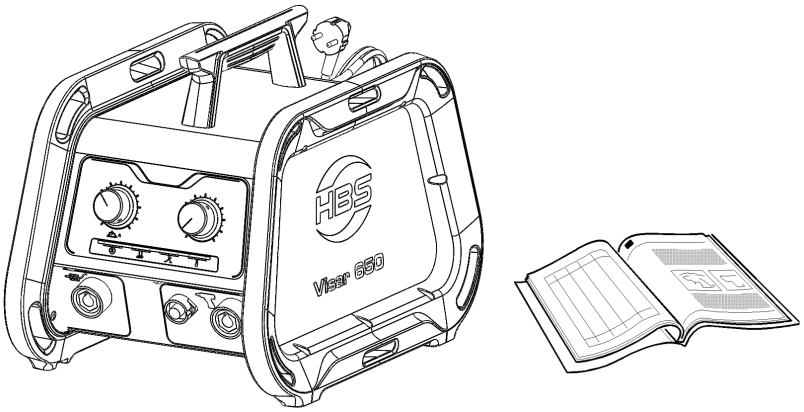

- Inspect the shipment for visible damage and completeness immediately on receipt.
- Report any transport damage or missing components immediately to the delivering shipping agent or the dealer (address, see page 2).

4 Accessories

The following **accessories** are available:

	No. of pieces	Part	Type	Order No.
	1	Ground cable	5 m, 25 mm²	93-40-020
	1	Toolbag		88-24-466

All rights reserved – Reprinting, in whole or in part, only with the approval of the manufacturer

The following **stud welding guns** are recommended for **Visar 650:**

Welding range*)	M3 - M6, Ø 2 - 6 mm	M6 - M10 (type RD) / Ø 6 - 8 mm		Ø 3 - 6 mm
Stud length	10 - 40 mm	10 - 150 mm		40 - 280 mm [1)] > 40 - 460 mm [2)]
	A 12	**A 12**	**A 12-FL**	**A 12-FL**
	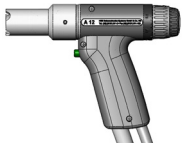			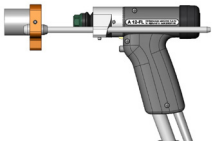
	• Small gun with easy set-up for ARC/SC welding • Length compensation (stable welding results)		• Simple set-up of the gun without length compensation	
Welding elements				
Welding process	SC	ARC (Ceramic)	ARC (Ceramic)	ARC (Insulation)
Stud type	SC threaded studs with flange (PS), pins with flange (US), pins with internal thread and flange (IS)	ARC threaded studs (FD/MD(DD)/PD/RD), pins (UD/ND), pins with internal thread (ID)		ARC ISO pins, ARC Fiberfix pins
Length compensation	3 mm automatic		--	
Lift	Adjustment range 3 mm, lockable		Fixed 6 mm	
Spring force	Adjustable, arresting		Fixed	
Welding cable	4.8 m, 35 mm², SK 50		5 m, 35 mm², SK 50	10 m, 35 mm², SK 50
	Order No.	**Order No.**	**Order No.**	**Order No.**
	93-20-276 (welding gun A 12 incl. centering tube PPR-2)	**93-20-275** (welding gun A 12 incl. ceramic leg assembly PSC-1)	**93-20-260** (welding gun A 12-FL excluding leg assembly) **93-40-022** (ceramic leg assembly PSC-1) not included in delivery	**93-20-26010** (welding gun A 12-FL excluding leg assembly) **93-40-066** [1)] **93-40-065** [2)] (ISO leg assembly PSI-3) not included in delivery

*) recommended welding range Visar 650 / welding gun with this equipment

©HBS Bolzenschweiss-Systeme GmbH & Co. KG

All rights reserved – Reprinting, in whole or in part, only with the approval of the manufacturer

5 Technical Data

Stud welding unit Visar 650 for ARC stud welding according to current standards

Welding range	ARC:	dia. 2 to 8 mm, M3 to M10 (type RD)		
	SC:	dia. 2 to 6 mm, M3 to M6		
Welding material	Mild steel, stainless steel			
Welding rate	25 °C	100 %	50 %	35 %
	T [studs/min]	8	14	18
	t [ms]	160	160	160
	I_2 [A]	650	650	650
	U_2 [V]	30	30	30
Welding current	650 A (max.)			
Current adjustment range	100 to 650 A			
Welding time	5 to 200 ms (stepless)			
Primary power	100 to 240 V, 1 phase, 50/60 Hz, 16 AT			
Primary plug	16 A 2-pin grounded safety plug (plug type F CEE 7/4)			
Connected load	≥ 3 kVA			
Cooling type	F (temperature controlled cooling fan)			
IP Code	IP 44 (also permits operation outdoors)			
Ambient temperature limits	0 °C to 40 °C			
Dimension L x W x H	474 x 337 x 351 mm (with handle)			
Weight	18 kg			

All rights reserved – Reprinting, in whole or in part, only with the approval of the manufacturer

6 Intended Use

Our stud welding units are designed and built exclusively for industrial use. Nonindustrial use is expressly forbidden due to the lack of know-how about the welding technology employed and the applicable standards.

The stud welding unit is intended exclusively for stud welding of standardised welding elements. Any other use will result in the desired strength of the welded joint being reduced.

This stud welding unit can only be used with the HBS stud welding guns A 12 and A 12-FL.

The intended use also implies observance of the stud welding gun operating manual and compliance with the intervals and conditions for inspection and maintenance of the stud welding unit and the components employed.

◆ Always check the operating manual of your stud welding gun whether it may be used with this stud welding unit.

The stud welding unit must be suitable for welding the welding elements in use.

Welding elements manufactured with the cold formed process have a flange and an ignition tip. During welding, the flange prevents the arc getting to the cylindric part of the welding element and increases simultaneously the welding area.

◆ **Please refer to the operating manual of your stud welding gun for detailed information on which welding elements may be used.**

©HBS Bolzenschweiss-Systeme GmbH & Co. KG

All rights reserved – Reprinting, in whole or in part, only with the approval of the manufacturer

7 Warranty

Please refer to the latest "General Terms and Conditions" for the scope of the warranty.

The warranty does not cover faults caused by e.g.

- Normal wear,
- Improper handling,
- Failure to observe the operating manual,
- Failure to observe the safety precautions,
- Use for other than the intended purpose, or
- Transport damage.

Warranty entitlement shall no longer be valid if modifications, changes or service and repair work is carried out by unauthorised persons or without the knowledge of the manufacturer. Invalidation of warranty entitlement shall also render the declaration of conformity invalid. The CE marking shall be declared invalid by the manufacturer.

We expressly point out that only spare parts and accessories or components approved by us may be used. The same applies likewise to installed units from our sub-suppliers.

All rights reserved – Reprinting, in whole or in part, only with the approval of the manufacturer

8 Components of the Stud Welding Unit

The Visar 650 is ideal for use on construction sites:

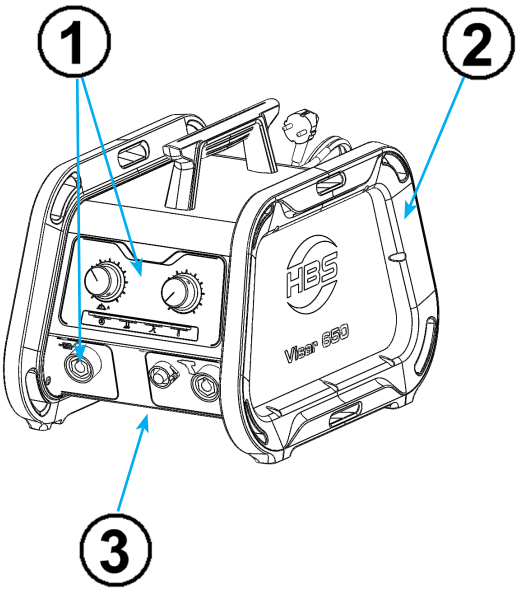

1 **Protection from damage:**

– Recessed operation panel

– Recessed and slanted connection sockets

2 **Sturdy configuration:**

– Circumferential side frame (bumper) made of PP foam

3 **Ground clearance:**

– Good stability on rough ground

– Protection against dirt and water

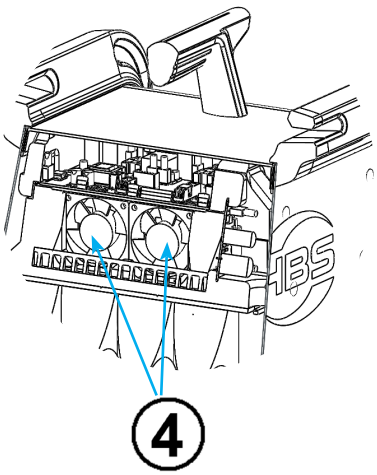

4 **Protection against internal soiling:**

– Internal fans

– Casing without ventilation slots to the outside

©HBS Bolzenschweiss-Systeme GmbH & Co. KG

All rights reserved – Reprinting, in whole or in part, only with the approval of the manufacturer

8.1 Main Assemblies

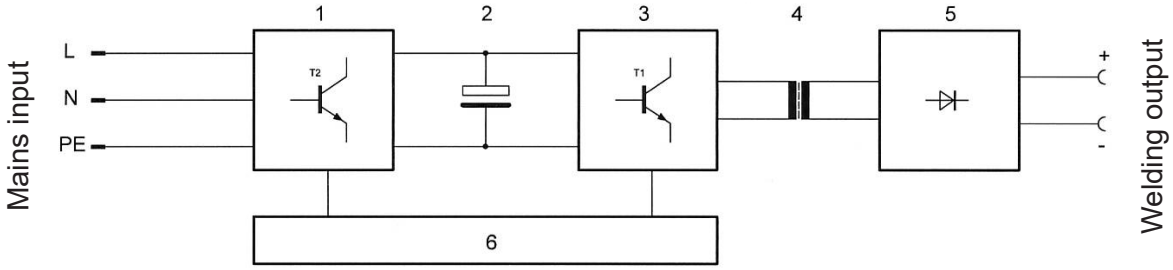

1 - PFC mains input

2 - Electrolytic capacitors

3 - IGBT switch

4 - Medium frequency transformer

5 - Rectifier

6 - Control unit

The mains voltage is rectified by the master switch and the EMV filter in the **PFC unit (1)**.

The rectified voltage is smoothed by the **electrolytic capacitors (2)** and led to the **IGBT switches (3)**. These switches turn the direct voltage into a high-frequency alternating voltage of 30 kHz.

The energy is transferred via the **medium frequency transformer (4)** with **diodes (5)** and rectified. The smoothed current is led to the weld bushes.

The **IGBT switch (3)** is controlled in the **control unit (6)**. The control unit also coordinates the mechanical process (withdrawing of the welding elements) with the electronic control system (triggering the pre current, triggering the main current, welding time process). The welding time and welding current are fully adjustable.

The type plate is located on the backside of the stud welding unit.

All rights reserved – Reprinting, in whole or in part, only with the approval of the manufacturer

Type plate

The type plate contains the following information:

- Manufacturer
- Type
- Order No./Serial No.
- Primary voltage
- Fuse
- Power consumption
- Cooling class
- IP code
- Date

©HBS Bolzenschweiss-Systeme GmbH & Co. KG

All rights reserved – Reprinting, in whole or in part, only with the approval of the manufacturer

8.2 Operation Panel and Display

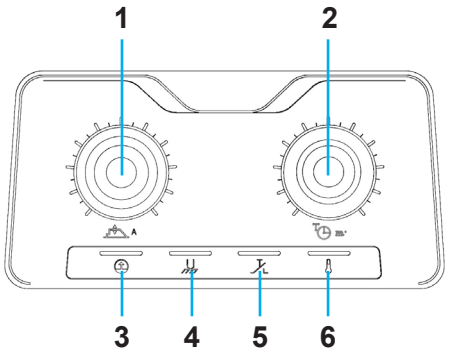

1 - Welding current
2 - Welding time
3 - Ready indicator
4 - Contact
5 - Trigger
6 - Temperature

In the lower part of the operation panel are light-emitting diodes (LED) with the following meanings:

	Yellow	Flashes quickly	After switching on the device: The capacitors are charged. The device runs a self-test.
		Flashes slowly	In sleep mode: After the self-test, the device is ready for welding and switches to sleep mode. Sleep mode is ended when the welding-gun trigger is actuated or the welding gun makes contact with the workpiece.
		Lights up	When the stud welding machine is ready for welding and sleep mode is ended. After about 3 minutes without use, the device switches to sleep mode.
		Flashes slowly	After switching off the device: The capacitors are discharged.
	Yellow	Lights up	When there is electrical contact between the welding element and the workpiece
	Yellow	Lights up	When the welding-gun trigger is actuated
	Yellow	Lights up	The stud welding machine is locked in the event of – the stud welding machine being thermally overloaded. Work can be continued after a short cool-down phase.

All rights reserved – Reprinting, in whole or in part, only with the approval of the manufacturer

8.3 Mains Switch

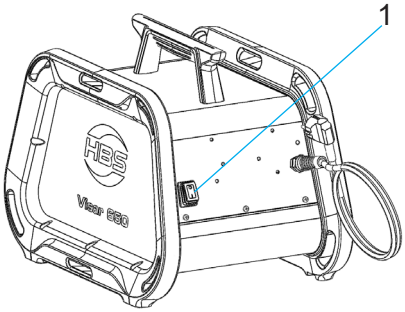

1 - Mains switch

The switch for mains mode is located on the rear of the stud welding unit.

©HBS Bolzenschweiss-Systeme GmbH & Co. KG
All rights reserved – Reprinting, in whole or in part, only with the approval of the manufacturer

9 Welding Process

Stud welding with a drawn arc process is divided into drawn-arc stud welding with ceramic ferrule and drawn-arc stud welding with shielding gas. This stud welding unit must be used exclusively for stud welding with drawn arc.

The face of a stud-shaped welding element and the opposite surface of the workpiece are molten by an arc. Stud welding is suitable for the welding of joining elements across the entire cross-section, mainly using pin-shaped metallic welding elements with metallic workpieces.

The various processes of arc stud welding are distinguished by:

– The method of weld pool protection (shielding gas - SG, ceramic ferrule - CF or no protection - NP)
– The length of welding time (standard ARC or short-cycle drawn-arc stud welding - SC)
– The energy source (welding rectifier supplied by mains, inverter, capacitor battery).

Drawn-Arc Stud Welding

The HBS stud welding unit operates by process of ‘arc stud welding with drawn-arc ignition’ according to the current standards. The standards assign this method of joining pin-shaped elements with plane workpieces to the so called ‘Arc Pressure Welding’.

Joining is carried out in plastic or liquefied condition of the welding zone. The process can be carried out mechanically or automatically, depending on the used welding guns/welding heads.

Generally, the positive pole of the stud welding unit is connected to the workpiece. The welding element is manually or automatically inserted into the chuck of the welding gun or of the welding head. Then it is placed onto the workpiece - possibly equipped with a ceramic ferrule (see figure, **position 1**). When the button of the welding gun is triggered, the automated welding process starts, which works as follows:

All rights reserved – Reprinting, in whole or in part, only with the approval of the manufacturer

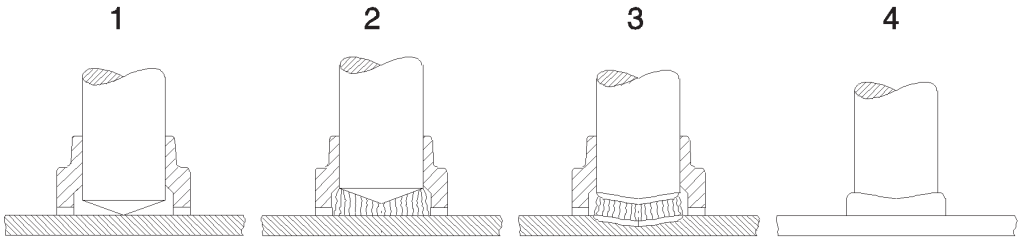

- At the beginning of the welding process, the welding element (stud) in the welding gun is lifted clear off the workpiece by a lifting device (solenoid). An initial switched current triggers a pilot arc of a low current power (see figure, **position 2**). Then the main arc ignites between the face area of the welding element and the workpiece.
- The main arc burns at the set current during the welding time preselected at the stud welding unit. The selected welding energy must match the requirements of the selected welding element. The energy of the arc melts the face of the welding element and the workpiece (see figure, **position 3**).
- At the end of the preset welding time, the stud is mechanically moved to the workpiece. On plunging into the weld pool, the two weld zones join and solidify. The contact of stud and workpiece extinguishes the arc in a short-circuit and the main current is switched off.
- The weld zone solidifies and cools down. The welding element is now welded to the workpiece over its entire cross-section of the welding element (see figure, **position 4**). As soon as the weld metal is cooled down, the welding gun can be carefully withdrawn from the welding element. When using shielding gas, the shielding gas flow is switched off with the withdrawal of the welding gun. If a ceramic ferrule is used, it can be removed by light hammer blows.

The welding range of drawn-arc stud welding is about 3 to 25 mm diameter when using mild steel/stainless steel. Welding elements with rectangular cross-section should not exceed a ratio length : width of about 5 : 1. All technical information and adjustment values are based on the use of welding elements which correspond with current standards.

©HBS Bolzenschweiss-Systeme GmbH & Co. KG
All rights reserved – Reprinting, in whole or in part, only with the approval of the manufacturer

Variants of drawn-arc stud welding

Item	Drawn arc stud welding with ceramic ferrule	Drawn arc stud welding with shielding gas	Short-cycle drawn arc stud welding with shielding gas
Diameter welding element d metric in mm (imperial)	3 - 25 (#4 or 12 gage to 1“)	3 - 12 (16) (#4 or 12 gage to 1/2“ (5/8“)), by using aluminium up to 12 mm/ 1/2“)	3 - 12 (#4 or 12 gage to 1/2“), by using brass and aluminium with shielding gas
Max. current I in A	3 000	3 000	2 000
Welding time t in ms	100 - 2 000	100 - 2 000	10 - 100
Energy source	Welding rectifier, inverter	Welding rectifier, inverter	Welding rectifier, inverter
Weld pool protection	Ceramic ferrule CF	Shielding gas SG	Shielding gas SG or no protection NP
Material welding element (suitable for welding)	Mild steel, stainless steel	Mild steel, stainless steel, aluminium (up to 12 mm)	Mild steel, stainless steel, brass and aluminium with shielding gas
Workpiece surface	Metallic bright (rolling skin, rust film, welding primer)	Metallic bright (rolling skin, rust film, welding primer)	Metallic bright, galvanised (< 40 µm), slightly oiled
Min. thickness of workpiece	1/4 d min. 1 mm	1/8 d min. 1 mm	1/10 d approx. 0.7 mm
Adjustable parameters	Welding current I in A = 80 x d (up to 16 mm)	Welding current I in A = 80 x d (up to 16 mm)	Welding current I in A = 100 x d (up to 12 mm)
	Welding time t in ms = 20 x d (up to 12 mm)	Welding time t in ms = 20 x d (up to 12 mm)	Welding time
	Lift (arc length)	Lift (arc length)	Lift (arc length)
	Protrusion, immersion speed (plunge damper from 14 mm diameter)	Protrusion, immersion speed (plunge damper from 14 mm diameter)	Protrusion, immersion speed

All rights reserved – Reprinting, in whole or in part, only with the approval of the manufacturer

Drawn-Arc Stud Welding with Ceramic Ferrule

Drawn-arc stud welding with ceramic ferrule is used with welding elements of 3 to 25 mm diameter (preferably above 12 mm diameter) and with welding times of about 100 to 2 000 ms. It is generally suitable for all welding positions. When stud welding with ceramic ferrule, the welding position is PA (flat position). The major part of all applications applies to this procedure.

The ceramic ferrule (CF):

- prevents atmosphere from getting to the weld pool by a formation of metal vapor in the arc chamber
- stabilizes and concentrates the arc, thus decreasing the arc blow effect
- forms the melt under pressure to a weld collar and supports the weld pool on a vertical wall and overhead
- protects the welder from arc radiation and welding spatters

Normally, the ceramic ferrule is used for only one weld and is removed after solidification of the weld pool.

Standard welding elements and ceramic ferrules are described in EN ISO 13918. When using concrete anchors or shear connectors the front area can be plane constructed with a small pressed-in aluminium ball.

Studs with cone-shaped front area and aluminium ball are preferably used with ceramic ferrule.

©HBS Bolzenschweiss-Systeme GmbH & Co. KG

All rights reserved – Reprinting, in whole or in part, only with the approval of the manufacturer

10 Preparing Workplace and Welding Process

Danger from fumes and airborne particulates

- Switch on the welding fume extractor at the workplace.
- Ensure that the room is well ventilated.
- Never weld in rooms with a ceiling height of less than 3 m.
- Observe furthermore your working instructions and the accident prevention regulations.

This will help to avoid health damage due to fumes and airborne particulates.

Danger from fire and explosion

- Remove all inflammable materials and liquids from your working area.
- Ensure that there are no explosive materials in your working area.
- Ensure that an approved fire extinguisher is available at the workplace.

Danger from tripping and falling

- Lay cables and connecting leads in such a way that they are protected against damage and
- that you or third parties cannot trip over them or fall.

Warning of weld spatter

- Ensure that there is no equipment or apparatus in the working area that could be damaged by weld spatter.
- Remove if necessary.

All rights reserved – Reprinting, in whole or in part, only with the approval of the manufacturer

Warning of electromagnetic fields

- Ensure that there is no equipment or apparatus in the working area that could be damaged by magnetic fields.
- Remove if necessary.

Danger!

- Ensure that there is a free circulation of air through the housing of the stud welding unit.
- Always place the stud welding unit on a stable, level and clean surface.
- Check the condition of all cables and cable connections.
- Have defective cables or their connections immediately repaired or replaced by a qualified electrician.

10.1 Preparing Surfaces

- Remove
  - Paint, oil and other impurities,
  - Rust,
  - Non-conductive coatings (of surface-coated materials)

from the welding surface and the contact points of the ground clamps.

This ensures a high strength of the welded joints.

- **Weld the welding element only to a flat surface.**
- Ask your application consultant at HBS about welded joints on tubes and riffle plates (*see page 2*).

©HBS Bolzenschweiss-Systeme GmbH & Co. KG

All rights reserved – Reprinting, in whole or in part, only with the approval of the manufacturer

10.2 Checking the Stud Welding Gun

- Always check the operating manual of your stud welding gun to see whether it may be used with this stud welding unit.

This stud welding unit can only be used with the HBS stud welding guns A 12 and A 12-FL.

- Check the chuck of your stud welding gun for proper fit and ensure it is tightened.
- Check the bellows of your stud welding gun for damage.
- Check if spring force and lift are set according to the welding parameter table in the operating manual of the stud welding gun.

- **Refer here to the operating manual of your stud welding gun.**

All rights reserved – Reprinting, in whole or in part, only with the approval of the manufacturer

11 Connection

- **First prepare your workplace.**
- Read and observe here *point 10 "Preparing Workplace and Welding Process"*.

Electric shock hazard

- Leave the stud welding unit switched off during connection of the connecting leads.

In this way you can avoid any unintentional starting of the welding process.

- **Secure the cables.**

Strong magnetic fields are generated during the welding process that can lead to whipping of the cables. This can cause the cables to come out of the plug sockets.

©HBS Bolzenschweiss-Systeme GmbH & Co. KG

All rights reserved – Reprinting, in whole or in part, only with the approval of the manufacturer

11.1 Connecting the Welding Gun to the Stud Welding Unit

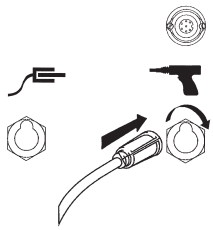

Connect the welding current cable

- Only now plug the welding current cable into the corresponding socket of the stud welding unit.
- Press in the plug and turn it firmly clockwise (to the right).

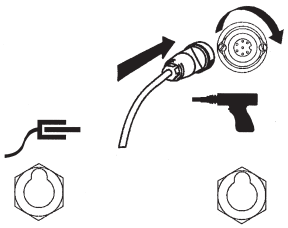

Connect the control cable

- Plug the control cable in the connector of the stud welding unit.
- Twist the retaining nut of the control cable connector clockwise.

Only loosely made connections will result in damage to the plug connectors.

- Therefore always check that the plug connector is firmly inserted.

This prevents a poor contact and hence overheating of the plug connectors.

11.2 Connecting the Ground Cable

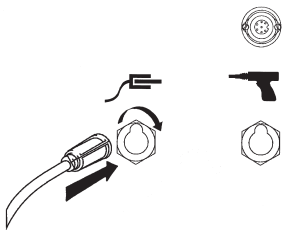

Connect the ground cable

- Plug the ground cable into the corresponding socket of the stud welding unit.
- Press in the plug and turn it firmly clockwise (to the right).

All rights reserved – Reprinting, in whole or in part, only with the approval of the manufacturer

Only loosely made connections will result in damage to the plug connectors.

◆ Therefore always check that the plug connector is firmly inserted.

This prevents a poor contact and hence overheating of the plug connectors.

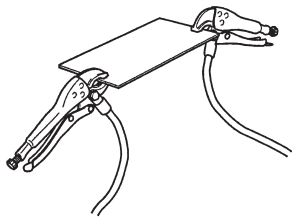

Connect the ground clamps

◆ Remove rust, paint and dirt from the points on the workpiece to which you wish to connect the ground clamps.

◆ Attach the ground clamps to the workpiece as tightly as possible.

◆ Pay attention to a good contact and symmetrical connection.

The welding point should be in the middle between the two ground clamps.

©HBS Bolzenschweiss-Systeme GmbH & Co. KG

All rights reserved – Reprinting, in whole or in part, only with the approval of the manufacturer

11.3 Connecting the Stud Welding Unit to the Mains Supply

Electric shock hazard

- Have an electrician check whether the plug socket to which you intended to connect the stud welding unit is correctly earthed.
- Connect the stud welding unit only to a mains supply with the same mains voltage as that indicated on the type plate.
- Compare the current consumption indicated on the type plate with the fuse of your mains power supply.
- Check that the stud welding unit is switched off.
- Only now insert the plug into the plug socket.

All rights reserved – Reprinting, in whole or in part, only with the approval of the manufacturer

12 Welding

- **First connect up the stud welding unit.**
- Read and observe here *point 11 „Connection“*.

Life-threatening danger for wearers of active implanted cardiac devices

Danger for workers at particular risk within the meaning of the EMF directive

Persons at particular risk within the meaning of the EMF directive are:

– Workers with active implanted medical devices
– Workers with passive implanted medical devices that contain metal
– Workers with medical devices worn on the body
– Pregnant workers.

- Never operate the stud welding machine if you are among the group of workers at particular risk within the meaning of the EMF directive.
- In this case, never remain in the vicinity of the stud welding machine during welding.
- Never operate the stud welding machine if persons are located nearby who are among the group of workers at particular risk within the meaning of the EMF directive.

Strong electromagnetic fields are produced in the vicinity of the stud welding machine during welding. These fields can adversely affect the function of medical devices as well as the course of a pregnancy.

©HBS Bolzenschweiss-Systeme GmbH & Co. KG
All rights reserved – Reprinting, in whole or in part, only with the approval of the manufacturer

12.1 Switching on the Stud Welding Unit

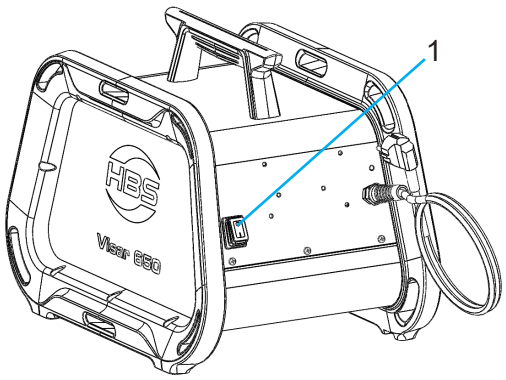

1 - Mains switch

◆ Only now switch on the stud welding unit at the **mains switch (1)**.

	Yellow	Flashes quickly for approx. 10 s after switching on the stud welding unit. The welding capacitors are being charged. Flashes slowly after switching on and system starting up and in the event of long unuse (sleep mode). ◆ End sleep mode by – actuating the welding gun start button or – placing the stud welding gun on the workpiece. Lights up when the stud welding unit is ready for welding. The welding capacitors are fully charged.

12.2 Determining the Welding Time and the Welding Current

Determination of welding time and welding current at the stud welding unit depends i.a. on

– the stud welding gun used,

– the material of the welding element,

– the diameter of the welding element,

– the material of the workpiece.

◆ Determine welding time and welding current to be set at the stud welding unit using the following tables.

The figures in these table are indicative values and must be checked by means of a test welding on the original material with the same properties as the original workpiece.

All rights reserved – Reprinting, in whole or in part, only with the approval of the manufacturer

Determining the Welding Time and the Welding Current for Welding Guns A 12 and A 12-FL

for drawn-arc stud welding with ceramic ferrule

Welding elements Material: 4.8 (suitable for welding)		Diameter of welding elements				Welding current [1] Visar 650 I in A	Welding time [1] Visar 650 t in ms
		metric		imperial (US)			
		Stud diameter in mm	eff. diameter in mm	Stud diameter in inches	eff. diameter in inches		
Material of workpiece: Mild steel (suitable for welding)							
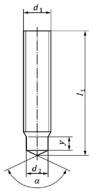		Ø d_1	Ø d_2	Ø d_1	Ø d_2		
	RD (MR) [2]	M6	4.7	1/4	0.185	380	100
	RD (MR) [2]	M8	6.2	5/16	0.244	500	130
	RD (MR) [2]	M10	7.9	3/8	0.311	640	160
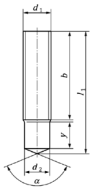		Ø d_1	Ø d_2	Ø d_1	Ø d_2		
	FD/PD/MD (DD) [2]	M6	5.35	1/4	0.211	432	108
	FD/PD/MD (DD) [2]	M8	7.19	5/16	0.283	576	144
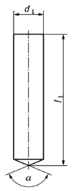		Ø d_1		Ø d_1			
	UD/ND [2]	3		#4 /12 gage		240	60
	UD/ND [2]	4		#8		320	80
	UD/ND [2]	5		#10 7 3/16		400	100
	UD [2]	6		1/4		480	120
	UD [2]	8		5/16		640	160

[1] to be checked by test weldings

[2] Information and recommendations on this can be found in DIN EN ISO 14555.

©HBS Bolzenschweiss-Systeme GmbH & Co. KG

All rights reserved – Reprinting, in whole or in part, only with the approval of the manufacturer

Determining the Welding Time and the Welding Current for Welding Guns A 12 and A 12-FL

for drawn-arc stud welding without ceramic ferrule

Welding elements Material: 4.8 (suitable for welding)		Diameter of welding elements				Welding current [1] Visar 650 I in A	Welding time [1] Visar 650 t in ms
		metrisch		imperial (US)			
		Stud diameter in mm	eff. diameter in mm	Stud diameter in inches	eff. diameter in inches		
Material of workpiece: Mild steel (suitable for welding)							
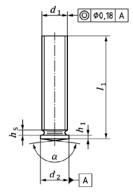		Ø d_1	Ø d_2	Ø d_1	Ø d_2		
	PS (US, IS) [3]	M3	4	1/8	0.157	400	10
	PS (US, IS) [3]	M4	5	5/32	0.197	600	15

[1] to be checked by test weldings

[3] Information and recommendations on this can be found in DVS 0902.

All rights reserved – Reprinting, in whole or in part, only with the approval of the manufacturer

12.3 Setting the Welding Parameters

Adjusting the Welding Time

- **First determine the necessary welding time.**
- Read and observe here Point 12.2 *„Determining the Welding Time and Welding Current“*.

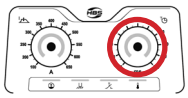

- Only now set the welding time (🕒) with the knob.

Adjusting the Welding Current

- **First determine the necessary welding current.**
- Read and observe here Point 12.2 *„Determining the Welding Time and Welding Current“*.

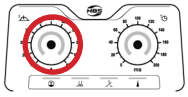

- Only now set the welding current (⏚) with the knob.

©HBS Bolzenschweiss-Systeme GmbH & Co. KG
All rights reserved – Reprinting, in whole or in part, only with the approval of the manufacturer

12.4 Performing the Welding Process

- **First set the necessary welding parameters.**
- Read and observe here point *12.3 „Setting the Welding Parameters“*.

Electric shock and electric arc hazard

- Never touch the welding elements, chuck, retaining nut or electrically conductive parts in their vicinity during the welding process.

These parts are live.

- Never wear metal jewellery, even a wristwatch, on your body during the welding process.

This will help to avoid injuries and damage due to electric power or electromagnetic fields.

Electric shock and electric arc hazard

- Stand on an insulated mat if you have to weld under the following conditions:

– In confined spaces with electrically conductive walls
– Under cramped conditions between or against electrically conductive parts
– Where there is limited mobility on electrically conductive parts
– In damp, wet or hot rooms.

All rights reserved – Reprinting, in whole or in part, only with the approval of the manufacturer

Danger of deflagration of explosive gases and substances

- Never weld in rooms with an explosion hazard.
- Never weld on vessels containing or that have contained substances
  - which are inflammable or promote combustion,
  - which may create health-endangering gases, fumes or airborne particulates,
  - or which could cause explosions.

Such work may only be carried out by welding specialists.

- Do not carry out such work if you have not been specially trained for it.

Risk of fire and burns due to glowing weld spatter

- Wear your personal protective equipment and
- your safety goggles with sight glass of protection class 2.
- Wear a protective helmet when welding over head.
- Remove all inflammable materials and liquids from the vicinity of the place of work before starting welding.
- Ensure that an approved fire extinguisher is available at the place of work.
- Observe furthermore your working instructions and the accident prevention regulations.

Glowing hot weld and liquid spatter occur during welding.

©HBS Bolzenschweiss-Systeme GmbH & Co. KG

All rights reserved – Reprinting, in whole or in part, only with the approval of the manufacturer

Danger due to noise

- Wear your ear protection during welding.
- Observe furthermore your working instructions and the accident preventi-on regulations.
- Inform colleagues working in the immediate vicinity accordingly before starting work.

A > 90 dB (A) bang can occur during the welding process.

- Ensure that the welding gun has been prepared in accordance with the corresponding operating manual.

- Check whether a welding element has been inserted into the welding gun.
- Insert a welding element, if necessary.

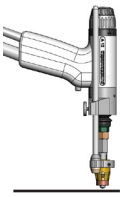

- Place the welding gun perpendicularly onto the workpiece as soon as the stud welding unit is ready for the welding process.
- Press the welding gun firmly with both hands against the workpiece until the welding gun attachment (spacer) is resting uniformly on the workpie-ce.

- Hold the welding gun firmly, steady and straight.
- Ensure that you do not touch any metal parts of the welding gun.
- Only now should you press the button of the welding gun.

The welding process is started.

- **Always pull the welding gun perpendicularly away from the welding element after the welding process**.

If you pull the welding gun away at an angle, you will strain the chuck and shorten its service life.

Risk of burns

The gun head becomes very hot during the welding process. The same applies to the welded element and the workpiece.

- Wear your proper protective clothing.

All rights reserved – Reprinting, in whole or in part, only with the approval of the manufacturer

☞

- **Use only welding elements of one batch.**
- Pay strict attention not to mix welding elements from different batches.
- Carry out test welds again after a batch change.

Even the slightest changes to the geometry, in particular to the tip of the welding elements require different settings for the welding process.

☞

- Now check the quality of the welded joint before inserting a new welding element and repeating the welding process.
- Work in accordance with the following *point 13*.

12.5 Sleep Mode

If the stud welding unit is switched on and no welding is performed, sleep mode is started after approx. 10 minutes; internal energy consumption is reduced. The “Ready” LED flashes slowly.

- End sleep mode by

– actuating the welding gun start button or

– placing the stud welding gun on the workpiece.

©HBS Bolzenschweiss-Systeme GmbH & Co. KG

All rights reserved – Reprinting, in whole or in part, only with the approval of the manufacturer

13 Checking the Quality of the Weld

You can check the quality of the weld by means of a visual inspection and a bending test.

The number and type or method of the tests to be performed and the acceptance criteria are defined in respective standards for quality demands.

13.1 Carrying out Visual Inspection

◆ Carry out a visual inspection on all welding elements.

Visual Inspection			
Condition		Possible cause	Corrective actions
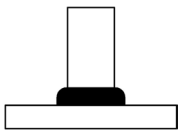	Collar regular, bright and complete. Lengths after weld within tolerances	Correct parameters	none
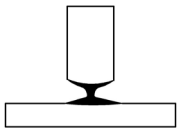	Contraction of weld collar Welding element too long	Plunging depth or lift too low Weld power too high Ceramic ring not centered correctly Plunge rate too high	Increase plunging depth, check lift and centering of the ceramic ring Reduce current and/or time Check centering Adjust plunge and/or gun dumper
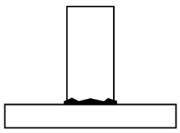	Weakly developed, uneven weld collar with mat surface Welding element too long	Weld power too low Ceramic ferrule is moist Lift too low	Increase current and/or time Dry out ferrules in oven Increase lift
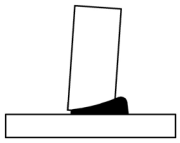	Collar off centre Undercut	Effect of arc blow Ceramic ferrule incorrectly centred	See arc blow effect Check centring
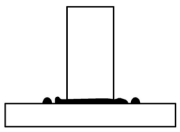	Weld collar low, shiny surface with many spatters Welding element too short	Weld energy too high Plunging speed too high	Decrease current and/or time Adjust plunging depth and/or damping factor

All rights reserved – Reprinting, in whole or in part, only with the approval of the manufacturer

13.2 Carrying out Bending Test

You can purchase from HBS a bending device with inserts for various diameters of the welding elements.

The bending test serves as an easy work sample and as a check for the selected welding parameters. The welded joint is stressed by bending in a non-defined way.

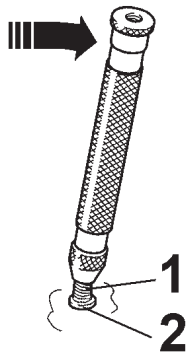

1 - Welding element

2 - Welded joint

◆ Place the bending device on the **welding element (1)** and

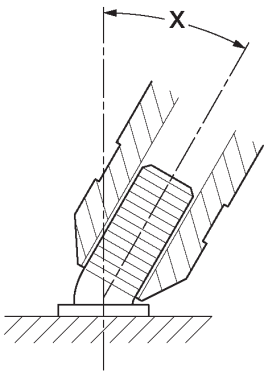

◆ bend the **welding element (1)** with the bending device once by 60° in any direction.

The bending test is passed if a crack or a fracture of the welded zone does not occur.

☞

◆ **Further tests should be conducted if the connection fails in the weld area.**

◆ In this case, **bend** the welding element exactly in the opposite direction by 60° towards the failing seam.

For a **non-destructive strength test** of the welding elements HBS offers a **torque bending test device** in accordance with DIN EN ISO 14555 (Order No. 92-40-135A).

©HBS Bolzenschweiss-Systeme GmbH & Co. KG

All rights reserved – Reprinting, in whole or in part, only with the approval of the manufacturer

☞

◆ You don’t need to test all studs.

It is sufficient to carry out stud tests on several production samples that are picked at random.

Bending Test			
Type of fracture		Possible cause	Corrective actions
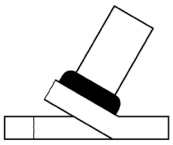	Tearing of parent material	Correct parameters	none
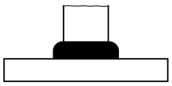	Fracture above collar after sufficient deformation	Correct parameters	none
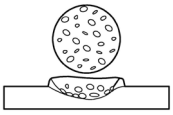	Fracture within the weld. High porosity	Weld energy too low Unclean surface Material not suitable for stud welding	Increase current and/or welding time Clean the surface Select suitable material
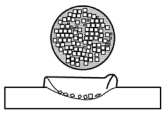	Fracture of weld Bright appearance	Welding time too low.	Increase welding time

If the strength of the joint is inadequate, then:

◆ check the setting of the stud welding unit.

◆ check whether the surface of welding element and base material are clean and electrically conductive.

They must be free from scale, oil, paint, oxide layers.

◆ Grind off hardened workpiece surfaces (e.g. roll hardening).

◆ Check the piston of the welding gun for ease of movement.

All rights reserved – Reprinting, in whole or in part, only with the approval of the manufacturer

13.3 Optimisation of Welding Parameters

- **As first step, conduct the tests outlined under points 13.1 and 13.2.**
- As second step optimise the welding parameters according to the table under *point 12.2 „Determining the Welding Time and Welding Current“*.

- Optimise the welding parameters of the stud welding unit.
- Check the settings of the welding gun.
- If necessary re-adjust the lift and spring pressure.

- **Refer here to the operating manual of your welding gun.**

©HBS Bolzenschweiss-Systeme GmbH & Co. KG
All rights reserved – Reprinting, in whole or in part, only with the approval of the manufacturer

13.4 Blowing Effect and Remedies

With asymmetric ground connections, different material distributions or when welding at the edge of a workpiece a "blowing effect" can occur. This is an undesirable deflection of the electric arc. This results in uneven melting of the stud material, in increased poring and undercuts in the welding area.

The blowing effect is proportional to the current amperage and can be influenced by symmetrical connection of the ground terminals, by connecting compensating grounds or (on welding guns with external welding cable) by turning the welding gun about its vertical axis.

Blowing effect	
Cause	Remedy
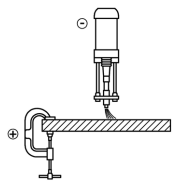	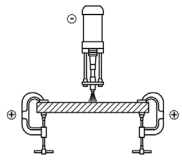
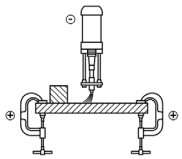	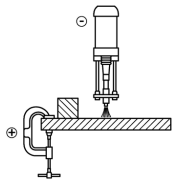
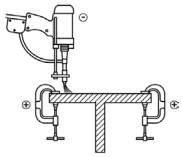	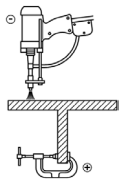

All rights reserved – Reprinting, in whole or in part, only with the approval of the manufacturer

14 Troubleshooting

Danger from insufficiently qualified operating personnel

- Carry out only the work described here on your stud welding unit or stud welding gun.
- Repairs may only be carried out by appropriately qualified personnel.
- Inform your dealer or your maintenance department.

Fault	Possible cause	Fault localisation	Fault remedy	Performance
No display	No ground connection	Check ground connection on workpiece	Tighten ground connection properly	Trained personnel
	Welding gun not connected	Check welding gun connection	Connect welding gun properly	Trained personnel
	Transition resistance (between stud and workpiece) too high	Check material surface	Clean or grind material surface	Trained personnel
	Ground cable broken	Check ground cable*)	Replace ground cable*)	Qualified specialists
	Welding gun cable broken	Check welding gun cable*)	Replace welding gun cable*)	Qualified specialists
No display	Defective connecting line of welding gun	Check function of connecting line*)	Replace connecting line*)	Qualified specialists
	Welding gun trigger button defective	Check control cable for electrical flow with triggered start button*)	Replace welding gun trigger button*)	Qualified specialists
	Control cable broken	Check control cable for electrical flow*)	Replace control cable*)	Qualified specialists
Continuously Yellow	Welding sequence too fast	Stud welding unit resets automatically	Let switched on stud welding unit cool down	Trained personnel
Gun does not lift, in spite of and	No lift adjusted	Check settings of welding gun	Modify set parameters	Trained personnel
	Short circuit of solenoid circuit of the stud welding gun	Check resistance value at control cable connector (18 Ω to 22 Ω) between Pin 1 and Pin 2*)	Replace control cable connector, control cable and solenoid*)	Qualified specialists
	Solenoid defective	Check solenoid (18 Ω to 22 Ω)*)	Replace solenoid*)	Qualified specialists
Lifting impossible	Solenoid circuit interrupted	Check resistance value at control cable connector (18 Ω to 22 Ω) between Pin 1 and Pin 2*)	Replace solenoid or control cable*)	Qualified specialists

©HBS Bolzenschweiss-Systeme GmbH & Co. KG
All rights reserved – Reprinting, in whole or in part, only with the approval of the manufacturer

Work marked with *) may only be carried out by qualified electricians!

- Please contact our Service department if none of the measures described remedies the situation.
- Please use the form „Service & Support“ in the annex to send in the stud welding unit.

All rights reserved – Reprinting, in whole or in part, only with the approval of the manufacturer

15 Shutting Down

- Switch off the stud welding unit.
- Pull out the mains plug.
- Disconnect the control cable and welding cables from the stud welding unit.
- Protect the stud welding unit and its components against the ingress of liquids and foreign matter.

©HBS Bolzenschweiss-Systeme GmbH & Co. KG
All rights reserved – Reprinting, in whole or in part, only with the approval of the manufacturer

16 Maintenance and Care

Electric shock hazard

- Always switch off the stud welding unit before starting maintenance and care work.
- Pull out the mains plug.

Danger from insufficiently qualified operating personnel

- Carry out only the work described here on your stud welding unit.
- Repairs may only be carried out by appropriately qualified personnel.
- Inform your dealer or your maintenance department.

16.1 Cleaning

- Clean the surface of the stud welding unit with a slightly damp cloth, when necessary.
- Add a little household detergent to the cleaning water.

- **Do not use solvents for cleaning.**

  These can damage the surface of your stud welding unit.

©HBS Bolzenschweiss-Systeme GmbH & Co. KG

All rights reserved – Reprinting, in whole or in part, only with the approval of the manufacturer

16.2 Inspection and Tests

- **Inspect the condition of the mains cable.**
- Inform your dealer or maintenance department if you discover any damage.

- Check whether the readings on the display of the stud welding unit are still legible before starting work.
- Clean display and control panel in the event of soiling.

- Replace any removed or damaged signs:

Before opening machine disconnect mains

Observe the operating manual

Warning of electric shock hazard

We recommend that the stud welding unit be subjected to an annual periodic inspection in compliance with the standard IEC 60974-4 “Periodic inspection and testing”.

Please contact your customer advisor for further information.

©HBS Bolzenschweiss-Systeme GmbH & Co. KG

All rights reserved – Reprinting, in whole or in part, only with the approval of the manufacturer

17 Storage

- Store the stud welding unit in a safe and dust-free location when not in use.
- Protect the stud welding unit from moisture and metallic contamination.

- Store the stud welding unit only under the following ambient conditions.

Storage temperature:

-5 °C to +50 °C

Relative humidity:

0 % - 50 % at +40 °C
0 % - 90 % at +20 °C

18 Disposal

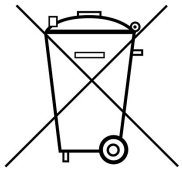

- Dispose of the stud welding unit only via the manufacturer or a specialist disposal company.
- Never dispose of the stud welding unit in the domestic refuse.

All rights reserved – Reprinting, in whole or in part, only with the approval of the manufacturer

EC Declaration of Conformity

in Accordance with Directive 2006/42/EC, Annex II 1 A
(Original EC Declaration of Conformity)

Herewith the manufacturer

HBS Bolzenschweiss-Systeme GmbH & Co. KG
Felix-Wankel-Strasse 18
P.O. Box 13 46
85221 Dachau
GERMANY
Phone +49 8131 511-0

declares for the following product

Machine information: Stud welding unit
Type: Visar 650
Order No: 93-60-0650
Serial No: 93-60-0650/241XXXX
Year of manufacture: 2024

in conjunction with HBS components

that the machinery fulfils all the relevant provisions to this Directive, including changes to the Directive to be applied at the moment of this declaration.

The product is conform with following further EU Directives, including changes to the Directives to be applied at the moment of this declaration:

„Low voltage guideline“ 2014/35/EU
„EMC guideline“ 2014/30/EU
„Directive on the restriction of the use of certain hazardous substances in electrical and electronic equipment“ 2011/65/EU

Following harmonised standards (or parts thereof) were applied:

DIN EN 60974-1	Arc welding equipment - Part 1: Welding power sources
DIN EN 60974-10	Arc welding equipment - Part 10: Product standard for arc welding equipment
DIN EN 60204-1	Safety of machinery - Electrical equipment of machines; Part 1: General requirements

The following national standards and other specifications (or parts thereof) were applied:

VDE 0544-1

Persons who are based in the European community and who are authorised to compile the technical documentation:

Name: Address: see manufacturer

Dachau, 04.11.2024
Place of issue, Date

Anja Bloch (CEO HBS)

©HBS Bolzenschweiss-Systeme GmbH & Co. KG
All rights reserved – Reprinting, in whole or in part, only with the approval of the manufacturer

Service & Support

With the return please attach a copy of the filled out form together with the repair number given by HBS! Repairs without repair number will not be processed.

Repair number
(given by HBS)

_____

Company: _____
Name / Surname: _____
Street: _____
City, State and ZIP/Postcode: _____
Country: _____
Phone & Fax: _____
E-mail address: _____

Stud welding unit / stud welding gun type of model: _____
Serial number: _____
Date of purchase: _____
Purchased at distributor: _____

Detailed descriptions of errors: _____

Service & Support may be done up to the value of EUR _____ without quotation: ☐ Yes ☐ No

Could you find any damage / burn marks

on the cables: ☐ Yes ☐ No

on chucks: ☐ Yes ☐ No

Are all plug and screw connections tightly fastened *: ☐ Yes ☐ No

Are there any burn marks on plug or screw connections: ☐ Yes ☐ No

Is there any other visual damage (e.g. cracks, dents): ☐ Yes ☐ No

Have you checked the fuses: ☐ Yes ☐ No

Default on the display of the stud welding unit:

ARC / IT					CD / CDM / SC					
○	⊗				●		⊗			**

Which LED´s are illuminated (please mark with a cross)?

Please e-mail or fax this form to service@hbs-info.de or fax: +49 8131 511-100.
In case a repair is necessary a repair number will be given!

* See also operating manual chapter „Connection“
** Doesn´t light when using a contact welding gun

All rights reserved – Reprinting, in whole or in part, only with the approval of the manufacturer

Index

A

accessories 13
airborne particulates 7, 27
automatic welding head. 12

B

bang. 8, 41
basic configuration. 13
batch 42
bending device with inserts 44
bending test. 44
blowing effect. 47

C

capacitor 12
checking the quality. 43
cleaning 51
clothing, non-flammable 8
components of the stud welding unit 18
control cable 31

D

damage to the plug connectors 31
danger from incorrect use 6
determination of welding current 35
determination of welding time 35
disposal 53
drawn-arc stud welding, variants. 25

E

ear protection. 10
electrical hazards. 10
electric arc 12
electromagnetic fields 10
EMF directive, safety notices. 9

F

fire extinguisher 8, 40
fire extinguisher, approved 27
fire hazard 8
form „Service & Support“. 49, 55
full-ear hearing protection 8
fumes, harmful to health 7, 27
fuse 33

G

glossary 12
goggles with visor 8
ground cable 31
ground clamps. 32

H

hazards for the machine 10
hazards for the operator 10
heart pacemaker 7, 10, 34
helmet 8

I

intended use 16, 29

L

liquids, inflammable. 27

M

main assemblies 19
mains power supply. 33
mains switch 22
mains voltage 33
maintenance and care. 51
maintenance and care, regular 51
materials, inflammable. 27

O

operating manual. 13
operation panel and display. 21

P

protective apron. 8
protective equipment 8
protective equipment, personal 10
protective gloves 8

R

rectifier. 12
risk of burns. 40
risk of falling. 27
risk of fire. 40
risk of tripping 27

S

safety goggles 10
safety goggles with sight glass 8
safety precautions 6
scope of supply 13
shutting down 50
sleep mode 42
spacer 41

©HBS Bolzenschweiss-Systeme GmbH & Co. KG

All rights reserved – Reprinting, in whole or in part, only with the approval of the manufacturer

storage. 53
storage temperature 53
stud feeder. 12
stud welding gun 12, 14
stud welding system 12
stud welding unit 12, 29
substances, explosive 27
surface of base material 45
surface of welding element 45
switch on the stud welding unit 35
symbols used. 10

T

test welding 35
troubleshooting 48
type plate. 20, 33

V

vessels, welding work on. 40
visual inspection 43

W

warranty entitlement 17
welding current cable. 31
welding element. 12
welding gun attachment. 41
welding parameters 12, 29
welding process. 23
workpiece 12

All rights reserved – Reprinting, in whole or in part, only with the approval of the manufacturer

©HBS Bolzenschweiss-Systeme GmbH & Co. KG
All rights reserved – Reprinting, in whole or in part, only with the approval of the manufacturer

HBS Bolzenschweiss-Systeme GmbH & Co. KG
Felix-Wankel-Strasse 18 • 85221 DACHAU • GERMANY
Phone +49 8131 511-0 • E-mail sales@hbswelding.systems

www.hbswelding.systems