KAH 412 LA

Automatic Welding Head
with length compensation

94-37-412A

Operating Manual

2023

After-sales service for Germany:

HBS Bolzenschweiss-Systeme GmbH & Co. KG
Felix-Wankel-Strasse 18
85221 DACHAU
GERMANY

Phone	**+49 8131 511-0**
Fax	**+49 8131 511-100**
E-mail	**international@hbs-info.com**
Web	**www.hbs-info.com**

KAH 412 LA Operating Manual Issue 2023-01 Order No. E-BA 94-37-412A

Translation of the Original Operating Manual

Please keep the manual in a safe place for future reference.

Transmission and duplication of this document, dissemination and notification of the contents are not permitted unless expressly approved.

All rights, errors and technical amendments reserved.

© HBS Bolzenschweiss-Systeme GmbH & Co. KG

Dear Customer,

Many thanks for buying a stud welding machine from HBS Bolzenschweiss-Systeme.

We at HBS wish you success at all times when working with this stud welding machine.

The high level of quality of our products is guaranteed by ongoing further development in the design, equipment and accessories. This may result in differences between the present operating manual and your product. No claims can therefore be derived from the data, illustrations and descriptions.

We have compiled the data and information in this reference work with the greatest care, and have made every effort to ensure that the information contained in this manual was correct and up-to-date at the time of delivery. We can nevertheless give no guarantee for an absolutely error-free document.

Should you discover any errors or unclear points when reading this operating manual, please do not hesitate to contact us.

We would also be grateful for any feedback should you have any suggestions or complaints to make about our product.

HBS Bolzenschweiss-Systeme GmbH & Co. KG

Felix-Wankel-Strasse 18

85221 Dachau

GERMANY

All rights reserved – Reprinting, in whole or in part, only with the approval of the manufacturer

Table of Contents

1 Important Safety Precautions 6

2 Symbols and Terms Used 10

3 Scope of Supply 13

4 Accessories 13

5 Technical Data 14

6 Intended Use 16

7 Warranty 17

8 Components of the Automatic Welding Head 18

8.1 Main Assemblies 18

9 Welding Process 20

10 Preparing the Welding Head 21

10.1 Replacing the Pressure Spring 22

10.2 Adjusting the Working Position 23

10.3 Equipping the Welding Head 26

Manual and Automatic Equipment Parts 27

10.4 Adjusting Welding Parameters 33

Adjusting spring force 38

Adjusting the lift 39

11 Welding 40

12 Troubleshooting 41

©HBS Bolzenschweiss-Systeme GmbH & Co. KG

All rights reserved – Reprinting, in whole or in part, only with the approval of the manufacturer

13 Maintenance and Care 43

13.1 Cleaning 43

13.2 Inspection and Tests 45

13.3 Removing Equipment 46

13.4 Dismounting the Welding Head 47

14 Storage 48

15 Disposal 48

Declaration of Incorporation of partly completed Machinery 49

Service & Support 50

Index 51

All rights reserved – Reprinting, in whole or in part, only with the approval of the manufacturer

1 Important Safety Precautions

The target group for this manual are qualified personnel who in view of their technical training, know-how and experience and knowledge of applicable regulations are able to assess the work assigned to them and recognise potential hazards.

Danger from incorrect use

- Use the stud welding machine only for the purpose described in this manual.

Otherwise you may endanger yourself or damage the stud welding machine.

You endanger yourself and others if you operate the stud welding machine incorrectly or fail to observe the safety precautions and warnings. This can lead to serious injury or extensive material damage.

Danger for unauthorised operating personnel

- Work with the stud welding machine only when
  - You are appropriately trained, instructed and authorised to do so, and
  - You have read and completely understood this operating manual.
- Never work with the stud welding machine when you are under the influence of
  - Alcohol,
  - Drugs or
  - Medication.

Danger from unauthorised modifications

- Never modify the stud welding machine or parts thereof without obtaining a clearance certificate from the manufacturer.

You will otherwise endanger yourself. This can lead to serious injury or extensive material damage.

©HBS Bolzenschweiss-Systeme GmbH & Co. KG

All rights reserved – Reprinting, in whole or in part, only with the approval of the manufacturer

Life-threatening danger for wearers of active implanted cardiac devices

Danger for workers at particular risk within the meaning of the EMF directive

Persons at particular risk within the meaning of the EMF directive are:

– Workers with active implanted medical devices
– Workers with passive implanted medical devices that contain metal
– Workers with medical devices worn on the body
– Pregnant workers.

◆ Never operate the stud welding machine if you are among the group of workers at particular risk within the meaning of the EMF directive.
◆ In this case, never remain in the vicinity of the stud welding machine during welding.
◆ Never operate the stud welding machine if persons are located nearby who are among the group of workers at particular risk within the meaning of the EMF directive.

Strong electromagnetic fields are produced in the vicinity of the stud welding machine during welding. These fields can adversely affect the function of medical devices as well as the course of a pregnancy.

Danger from fumes and airborne particulates

◆ Switch on the welding fume extractor at the place of work.
◆ Ensure that the room is well ventilated.
◆ Never weld in rooms with a ceiling height of less than 3 m.
◆ Observe furthermore your working instructions and the accident prevention regulations.

This will help to avoid health damage due to fumes and airborne particulates.

All rights reserved – Reprinting, in whole or in part, only with the approval of the manufacturer

Danger from glowing metal spatter (fire hazard)

Glowing hot weld spatter and liquid splashes, flashes of light and a loud bang > 90 dB (A) must be anticipated during stud welding.

- Inform colleagues working in the immediate vicinity accordingly before starting work.
- Ensure that an approved fire extinguisher is available at the workplace.
- Do not weld when wearing working clothes soiled with flammable substances such as oil, grease, petroleum, etc.
- Wear your proper protective equipment, such as:
  - Protective gloves in accordance with the relevant standard,
  - Non-flammable clothing,
  - A protective apron over your clothing,
  - Full-ear hearing protection in accordance with the relevant standard,
  - A safety helmet when welding above your head,
  - Safety shoes,
  - Safety goggles with sight glass of protection level 2 in compliance with the applicable standards and do not look directly into the electric arc.
- Remove all flammable materials and liquids from the vicinity of the work area before starting welding.
- Weld at a safe distance from flammable materials or liquids. Select a safety distance large enough to ensure that no danger can arise from weld spatter.

Protection of the stud welding unit

- Protect the stud welding machine against the ingress of foreign matter and liquids caused by cutting or grinding work in the vicinity of your work area.

This will help to prolong the service life of your stud welding machine.

©HBS Bolzenschweiss-Systeme GmbH & Co. KG

All rights reserved – Reprinting, in whole or in part, only with the approval of the manufacturer

Safety notices in accordance with EMF directive 2013/35/EU

Currents flowing through electrical conductors during stud welding cause electric and magnetic fields that can occur, in particular, near the hand-held welding guns, the welding arrangement (e.g., welding cables) and the welding power sources.

Due to the high currents, high EMF exposures may occur.

Danger for workers at particular risk within the meaning of the EMF directive

Persons at particular risk within the meaning of the EMF directive are:

- Workers with active implanted medical devices
- Workers with passive implanted medical devices that contain metal
- Workers with medical devices worn on the body
- Pregnant workers.

Strong electromagnetic fields are produced in the vicinity of the stud welding machine during welding.

To reduce the danger posed by electromagnetic fields, we recommend, among other things, the following rules of conduct:

◆ Lay all cables as close together as possible.

For proper bundling and safeguarding of the cables, HBS offers protective tubes in various sizes.

◆ Do not position yourself between the welding cables.

◆ Only lay the cables to one side and position them as far as possible from the operating personnel.

◆ Do not loop the cables over your body, especially not at head level.

◆ Completely unwind the welding cables.

◆ Use the shortest possible welding cables.

◆ Place portable welding power sources as far away as possible while welding.

◆ If possible, do not operate welding power sources in the immediate vicinity of other persons, do not sit directly next to the welding power source while working and do not lean against it.

◆ In addition to these safety notices, also observe your work instructions and accident prevention regulations.

All rights reserved – Reprinting, in whole or in part, only with the approval of the manufacturer

2 Symbols and Terms Used

The symbols used in this operating manual have the following meanings:

Danger

Warns you of hazards that can lead to **injury of persons** or to **considerable material damage.**

Caution

Problems in operating **may occur** if this information **is not observed.**

No access for people with active implanted cardiac devices

No access for persons with implants made of metal

No access for pregnant women

Danger

Warns you of **electrical** hazards

Danger

Warns you of **electromagnetic fields** that can be generated during welding

These symbols prompt you to wear **personal protective equipment when working with the stud welding unit**.

This symbol prompts you to wear **ear protection**. **A loud bang > 90 dB (A) can occur during the welding process.**

©HBS Bolzenschweiss-Systeme GmbH & Co. KG

All rights reserved – Reprinting, in whole or in part, only with the approval of the manufacturer

Tip

Cross-reference to **useful information** on the use of the stud welding machine

Cross-references in this operating manual are marked with this symbol or ***are printed in italics***

Fire hazard

Have a suitable fire extinguisher for the working area ready before starting work.

◆ **Work instruction**

– **List**

©HBS Bolzenschweiss-Systeme GmbH & Co. KG

All rights reserved – Reprinting, in whole or in part, only with the approval of the manufacturer

Glossary

Automatic welding head:	Device for welding of welding elements
Capacitor:	Component for storage of electrical energy.
Electric arc:	Autonomous gas discharge between two electrodes when the current is high enough. A whitish light is emitted in the process. The electric arc allows very high temperatures to be generated.
Rectifier:	Electrical component that converts alternating voltage into direct voltage
Stud feeder:	Device for automatic feeding of welding elements
Stud welding gun:	Device for welding of welding elements
Stud welding system:	Stud welding unit including stud welding gun or welding head
Stud welding unit:	Device for provision of the electrical energy for stud welding
Thyristor:	Electronic component for contact-free switching of high currents; switching takes place via the control input
Welding element:	Component such as stud or pin that is welded to the workpiece
Welding parameters:	Mechanical and electrical settings at the stud welding gun or welding head and at the stud welding unit (e.g. spring force, charging voltage)
Workpiece:	Components such as sheet metal or tubes to which the welding elements are to be fastened

©HBS Bolzenschweiss-Systeme GmbH & Co. KG

All rights reserved – Reprinting, in whole or in part, only with the approval of the manufacturer

3 Scope of Supply

The **basic configuration** of your welding head unit contains the following parts:

No. of pieces	Part	Type	Order No.
1	Automatic welding head equipped for one stud dimension	KAH 412 LA	94-37-412A
1	Operating manual	KAH 412 LA	E-BA 94-37-412A

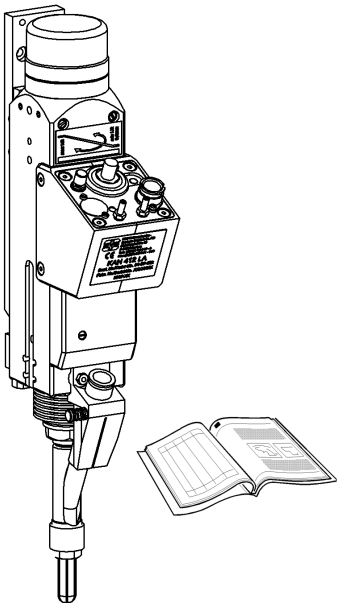

- Inspect the shipment for visible damage and completeness immediately on receipt.
- Report any transport damage or missing components immediately to the delivering shipping agent or the dealer (address, see page 2).

4 Accessories

For example:

Mounting tool set	80-09-281

Additional accessories can be found in our extensive accessories catalogue.

All rights reserved – Reprinting, in whole or in part, only with the approval of the manufacturer

5 Technical Data

Automatic Stud Welding Head Type KAH 412 LA

with length compensation for CD or ARC stud welding with automatic stud feeding according to current standard

Welding range	M3 to M8, dia. 3 to 8 mm (dia. 10/12/12.7 mm with modification only)
Stud length	8 to 40 mm (standard - other lengths on request)
Stud material	Mild steel, stainless steel, aluminium, brass
Total stroke of piston	7 mm
Stroke/Length compensation	5/2 mm, 4/3 mm
Spring force	Arresting
IP Code	IP 20 (protect against humidity)
Workplace noise level	> 90 dB (A) may occur during welding
Ambient temperature limits	0 °C to 40 °C
Dimension L x W x H	375 x 66 x 145 mm (with chuck and quick change system)
Weight	3.4 kg

©HBS Bolzenschweiss-Systeme GmbH & Co. KG

All rights reserved – Reprinting, in whole or in part, only with the approval of the manufacturer

Dimensional drawing welding head KAH 412 LA

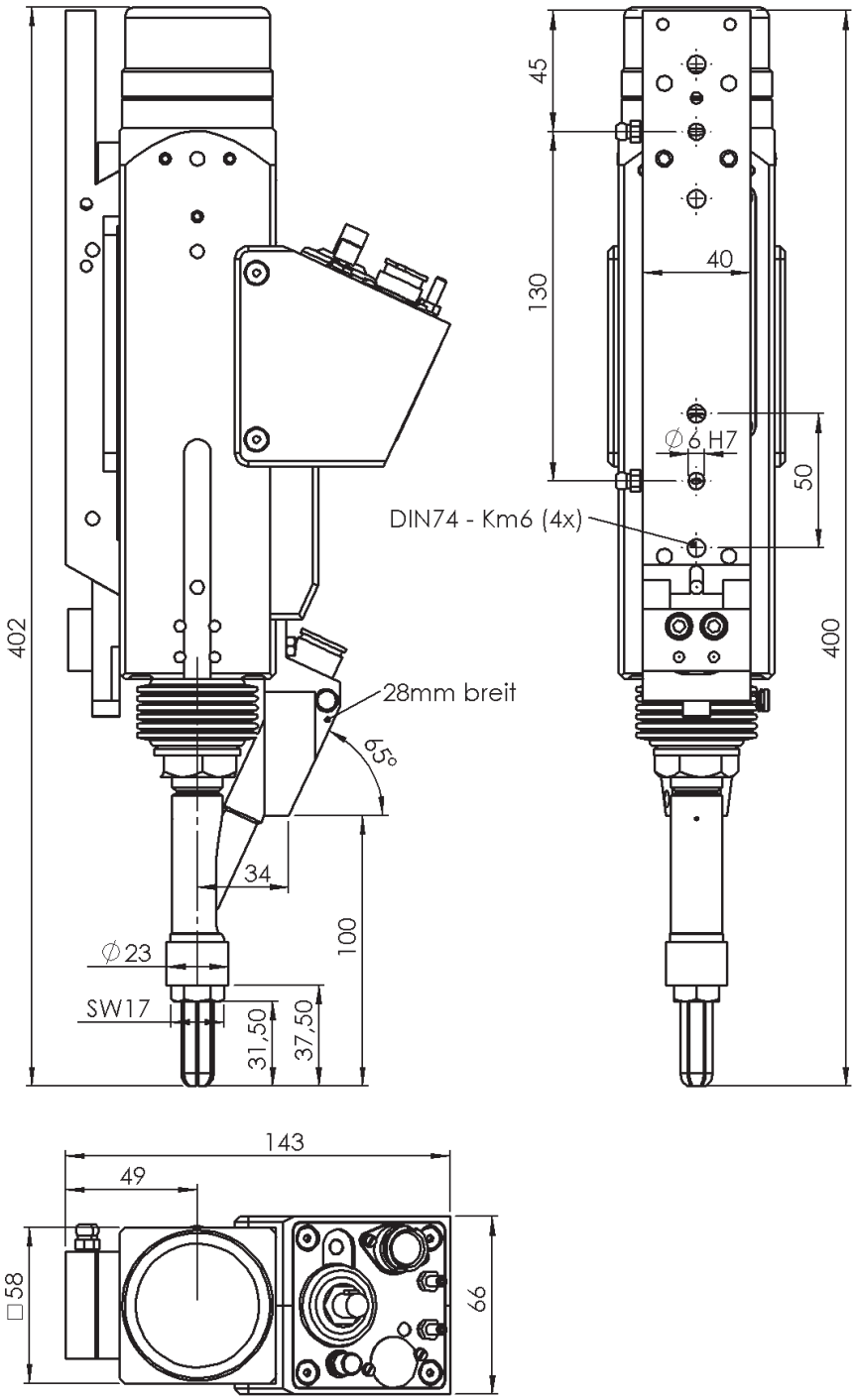

All rights reserved – Reprinting, in whole or in part, only with the approval of the manufacturer

6 Intended Use

The welding head has been designed exclusively for use with standardised stud welding elements. The use of any other elements will result in the desired strength of the welded joint being diminished.

This welding head must only be connected to HBS stud welding units.

◆ Always check with the operating manual of your stud welding unit whether this welding head may be used.

Observation of the operating manual of the used stud welding unit is also part of the intended use.

©HBS Bolzenschweiss-Systeme GmbH & Co. KG

All rights reserved – Reprinting, in whole or in part, only with the approval of the manufacturer

7 Warranty

Please refer to the latest "General Terms and Conditions" for the scope of the warranty.

The warranty does not cover faults caused by e.g.

- Normal wear,
- Improper handling,
- Failure to observe the operating manual,
- Failure to observe the safety precautions,
- Use for other than the intended purpose, or
- Transport damage.

Warranty entitlement shall no longer be valid if modifications, changes or service and repair work is carried out by unauthorised persons or without the knowledge of the manufacturer. Invalidation of warranty entitlement shall also render the declaration of conformity invalid. The CE marking shall be declared invalid by the manufacturer.

We expressly point out that only spare parts and accessories or components approved by us may be used. The same applies likewise to installed units from our sub-suppliers.

All rights reserved – Reprinting, in whole or in part, only with the approval of the manufacturer

8 Components of the Automatic Welding Head

8.1 Main Assemblies

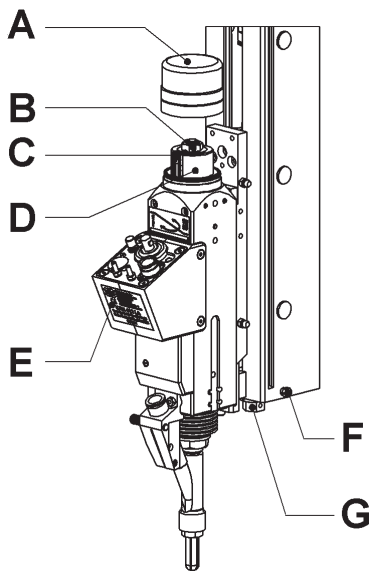

A - Rear cap

B - Spring adjustment screw

C - Display spring adjustment

D - Lift adjustment screw

E - Connection casing

F - Display lift

G - Screw height adjustment

H - Height adjustment

The base body of the KAH 412 LA automatic welding head consists of a section of square aluminium.

All supply lines (welding current cable, control cable, compressed air lines) are plugged into the **connection casing (E)**:

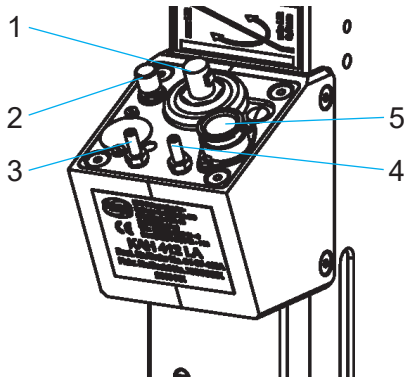

1 - Welding current connection

2 - Push button for triggering manually:
without contact: welding element is transported
with contact: welding is triggered

3 - Blue compressed air line connection

4 - Black compressed air line connection

5 - Control cable connection

©HBS Bolzenschweiss-Systeme GmbH & Co. KG

All rights reserved – Reprinting, in whole or in part, only with the approval of the manufacturer

Located on the front of the KAH 412 LA automatic welding head is the feed tube, which can be quickly changed via the pushbutton locking system. The infeed (manual or automatic) of the welding elements takes place via the feed tube in the slot piston with guide sleeve to the chuck. The plunger cylinder integrated in the piston (mounted backlash-free with linear ball bearings) pneumatically moves the welding element through the chuck to the welding position.

The entire adjusting mechanism for lift and spring force is located above the connection casing (E). The spring pressure is displayed directly via a scale.

The KAH 412 automatic welding head is secured to the Z-axis (either pneumatically or by means of a motor) via the prism quick-change system attached to the rear.

The type plate is located on the front of the welding head.

Type plate

The type plate contains the following information:

– Manufacturer

– Type

– Order No./Serial No.

– Date.

All rights reserved – Reprinting, in whole or in part, only with the approval of the manufacturer

9 Welding Process

This welding head is designed to be used for the following welding processes:

– Capacitor discharge (gap welding)

– Drawn arc (short-cycle stud welding, drawn-arc welding with shielding gas).

Please refer to the original operating manual of the used stud welding unit for the welding procedure.

©HBS Bolzenschweiss-Systeme GmbH & Co. KG

All rights reserved – Reprinting, in whole or in part, only with the approval of the manufacturer

10 Preparing the Welding Head

Prepare the welding head by

– adjusting the working position
– preparing the welding head for a welding element and
– adjusting lift and spring force.

◆ **Do not connect the welding head to the stud welding unit until it has been prepared.**

In this way you can avoid any unintentional starting of the welding process.

©HBS Bolzenschweiss-Systeme GmbH & Co. KG

All rights reserved – Reprinting, in whole or in part, only with the approval of the manufacturer

10.1 Replacing the Pressure Spring

The welding head is delivered with the pressure spring for the gap welding process (order no. 80-10-400).

◆ For replacing the pressure spring proceed as described in the following:

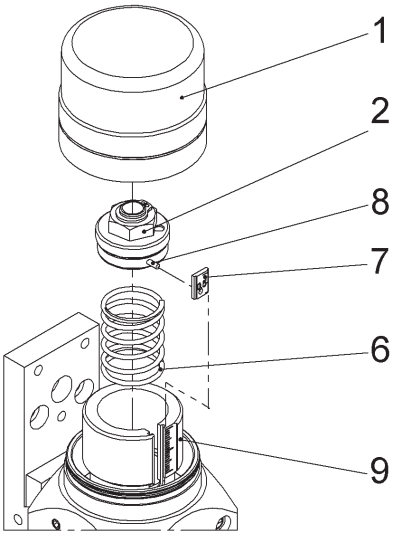

1 - Rear cap

2 - Spring adjustment screw

6 - Pressure spring

7 - Pointer

8 - Cylindrical pin

9 - Lift adjustment screw

◆ Pull off the rear cap (1).

◆ Release the spring adjustment screw (2) with a 17 mm socket wrench.

◆ Make sure that the pointer (7) on the cylindrical pin (8) does not get lost.

◆ Remove the pressure spring and replace it.

◆ Place the pointer back on the cylindrical pin (8) located on the spring adjustment screw (2).

◆ Reinsert the spring adjustment screw into the guide of the lift adjustment screw (9).

◆ Make sure that the pointer is situated in the groove guide of the lift adjustment screw.

◆ Tighten the spring adjustment screw.

◆ Attach the rear cap.

©HBS Bolzenschweiss-Systeme GmbH & Co. KG

All rights reserved – Reprinting, in whole or in part, only with the approval of the manufacturer

10.2 Adjusting the Working Position

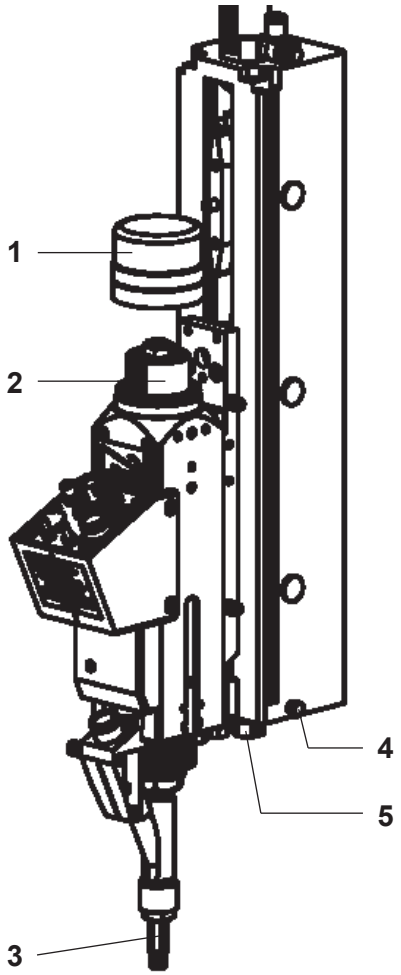

1 - Rear cap
2 - Adjustment screw
3 - Chuck
4 - Safety screw height adjustment
5 - Height adjustment

- Move a welding element into the chuck (3).
- Pull off the rear cap (1).
- Now set the highest possible gap (tip ignition method) or lift (drawn-arc method) on the spring adjustment screw (2).
- To do this, turn the spring adjustment screw clockwise to the stop block (2).
- Move the Z-axis (in setup mode) to the working position until a contact signal is displayed on the stud welding unit.
- To manually set the insertion depth on the pneumatic working stroke, loosen the locking screw for the height adjustment (4) and set the protrusion (insertion depth) with the aid of the height adjustment (5) according to your welding task.
- Move the Z-axis to the home position.

On CNC systems, the protrusion is controlled via the CNC program.

☞

- Check the **machine zero position when changing the chuck or stud batch** if the welding head is on an automatic welding system of type CPW or MPW.

This ensures dimensional stability of your stud positions.

All rights reserved – Reprinting, in whole or in part, only with the approval of the manufacturer

Determining the protrusion - capacitor discharge

The protrusion for PT, UT, IT as well as PS, US, IS type studs should be about 1.5 mm.

Dependent on

– welding process used,

– stud diameter,

– shape of the spatter ring or the welding seam

the protrusion can vary between 0.7 mm and 2 mm.

Gap welding tip ignition

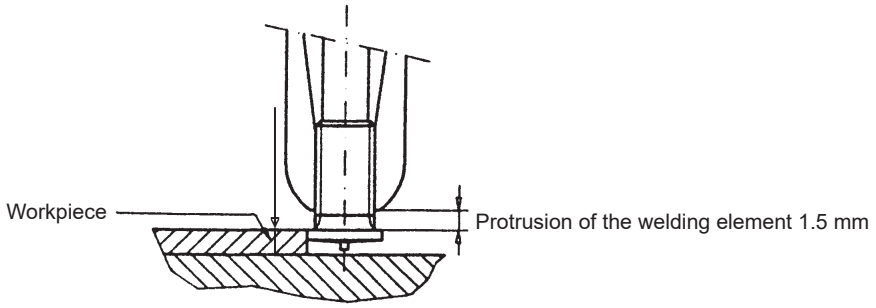

The upper edge of the flange must be flush with the upper edge of the workpiece.

©HBS Bolzenschweiss-Systeme GmbH & Co. KG

All rights reserved – Reprinting, in whole or in part, only with the approval of the manufacturer

Determining the protrusion - drawn arc

The following setting values are recommended for drawn arc welding of stud types PD, UD, ID:

Stud-Ø in mm	Protrusion in mm
5	2.5
6	3.0
7	3.2
8	3.5
10	4.0
12	4.4

Stud welding drawn-arc

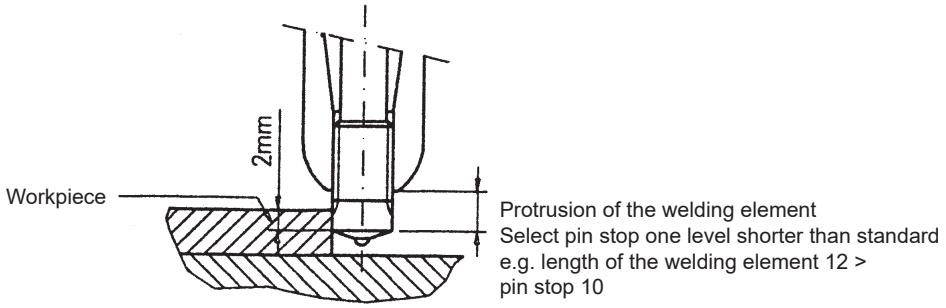

All rights reserved – Reprinting, in whole or in part, only with the approval of the manufacturer

10.3 Equipping the Welding Head

◆ **Switch the stud welding unit off and unplug the air connection (blue) before equipping the welding head!**

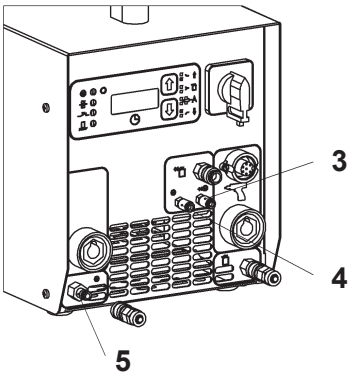

3 - Air outlet black

4 - Air outlet blue

5 - Compressed air supply

Included in the delivery contents of the automatic welding head is a set of equipment of your choice, consisting of:

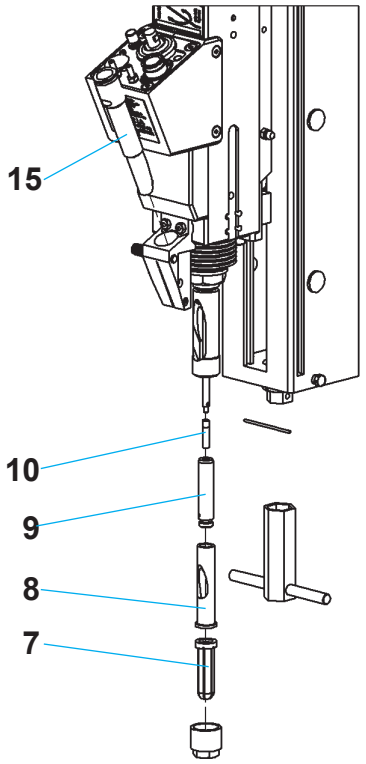

Pos:	Anzahl	Bezeichnung	Bestell-Nr.
15	1	Feed tube	*)
10	1	Plunger	*)
9	1	Pin stop	*)
8	1	Guide bushing	*)
7	1	Chuck	*)
	1	Pin 2 mm	80-10-208
	1	Socket wrench WAF 17	80-40-085

*) Selection according to model and dimensions of the welding element

©HBS Bolzenschweiss-Systeme GmbH & Co. KG

All rights reserved – Reprinting, in whole or in part, only with the approval of the manufacturer

Manual and Automatic Equipment Parts

Manual Equipment Part

for stud length
to approx. 12 mm:

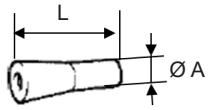

L = 21 mm

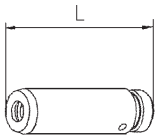

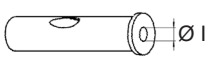

Ø I = Inner Ø

Ø I = Inner Ø

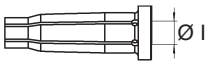

Ø I = Inner Ø

for stud length
from approx. 12 mm:

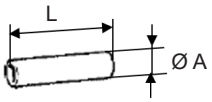

L = 21 mm

Stud dimen-sion	Pos. 10		Pos. 9		Pos. 8		Pos. 12		Pos. 7	
Ø x Length in mm	Plunger	Outside Ø Ø A in mm	Pin stop	Length L in mm	Guide sleeve	Inner Ø Ø I in mm	Manual feed tube	Inner Ø Ø I in mm	Chuck	Inner Ø Ø I in mm
3 x 8	84-40-531	2.5	80-07-782	40	80-07-761	5.3	80-07-801	5.3	84-50-003	5.5
3 x 10	84-40-531	2.5	80-07-783	42	80-07-761	5.3	80-07-801	5.3	84-50-003	5.5
3 x 12	84-40-531	2.5	80-07-784	44	80-07-761	5.3	80-07-801	5.3	84-50-003	5.5
3 x 15	84-40-531	2.5	80-07-785	47	80-07-761	5.3	80-07-801	5.3	84-50-003	5.5
3 x 20	84-40-561	4.6	80-07-786	52	80-07-762	6.3	80-07-802	6.3	84-50-003	5.5
3 x 25	84-40-561	4.6	80-07-787	57	80-07-762	6.3	80-07-802	6.3	84-50-003	5.5
3 x 30	84-40-561	4.6	80-07-788	62	80-07-765	10.3	80-07-805	10.3	84-50-003	5.5
3 x 35	84-40-561	4.6	80-07-789	67	80-07-765	10.3	80-07-805	10.3	84-50-003	5.5
3 x 40	84-40-561	4.6	80-07-789	67	80-07-765	10.3	80-07-805	10.3	84-50-003	5.5
4 x 8	84-40-531	2.5	80-07-782	40	80-07-762	6.3	80-07-802	6.3	84-50-004	6.5
4 x 10	84-40-531	2.5	80-07-783	42	80-07-762	6.3	80-07-802	6.3	84-50-004	6.5
4 x 12	84-40-531	2.5	80-07-784	44	80-07-762	6.3	80-07-802	6.3	84-50-004	6.5
4 x 15	84-40-531	2.5	80-07-785	47	80-07-762	6.3	80-07-802	6.3	84-50-004	6.5
4 x 20	84-40-561	4.6	80-07-786	52	80-07-763	7.3	80-07-803	7.3	84-50-004	6.5
4 x 25	84-40-561	4.6	80-07-787	57	80-07-763	7.3	80-07-803	7.3	84-50-004	6.5
4 x 30	84-40-561	4.6	80-07-788	62	80-07-765	10.3	80-07-805	10.3	84-50-004	6.5
4 x 35	84-40-561	4.6	80-07-789	67	80-07-765	10.3	80-07-805	10.3	84-50-004	6.5
4 x 40	84-40-561	4.6	80-07-789	67	80-07-765	10.3	80-07-805	10.3	84-50-004	6.5
5 x 8	84-40-531	2.5	80-07-782	40	80-07-763	7.3	80-07-803	7.3	84-50-005	7.5
5 x 10	84-40-531	2.5	80-07-783	42	80-07-763	7.3	80-07-803	7.3	84-50-005	7.5
5 x 12	84-40-531	2.5	80-07-784	44	80-07-763	7.3	80-07-803	7.3	84-50-005	7.5
5 x 15	84-40-561	4.6	80-07-785	47	80-07-763	7.3	80-07-803	7.3	84-50-005	7.5
5 x 20	84-40-561	4.6	80-07-786	52	80-07-765	10.3	80-07-805	10.3	84-50-005	7.5
5 x 25	84-40-561	4.6	80-07-787	57	80-07-765	10.3	80-07-805	10.3	84-50-005	7.5
5 x 30	84-40-561	4.6	80-07-788	62	80-07-765	10.3	80-07-805	10.3	84-50-005	7.5
5 x 35	84-40-561	4.6	80-07-789	67	80-07-765	10.3	80-07-805	10.3	84-50-005	7.5
5 x 40	84-40-561	4.6	80-07-789	67	80-07-765	10.3	80-07-805	10.3	84-50-005	7.5

All rights reserved – Reprinting, in whole or in part, only with the approval of the manufacturer

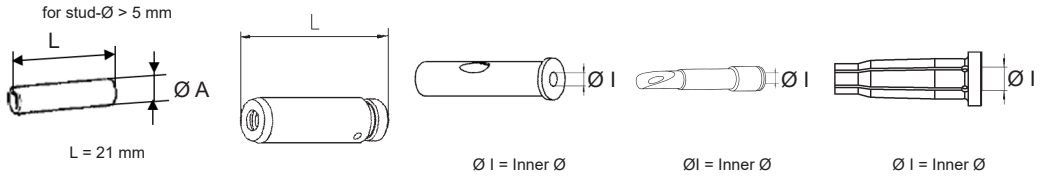

Stud dimension	Pos. 10		Pos. 9		Pos. 8		Pos. 12		Pos. 7	
Ø x Lenght in mm	Plunger	Outside Ø Ø A in mm	Pin stop	Length L in mm	Guide sleeve	Inner Ø Ø I in mm	Manual feed tube	Inner Ø Ø I in mm	Chuck	Inner Ø Ø I in mm
6 x 8	84-40-561	4.6	80-07-782	40	80-07-764	8.3	80-07-804	8.3	84-50-006	8.5
6 x 10	84-40-561	4.6	80-07-783	42	80-07-764	8.3	80-07-804	8.3	84-50-006	8.5
6 x 12	84-40-561	4.6	80-07-784	44	80-07-764	8.3	80-07-804	8.3	84-50-006	8.5
6 x 15	84-40-561	4.6	80-07-785	47	80-07-764	8.3	80-07-804	8.3	84-50-006	8.5
6 x 20	84-40-561	4.6	80-07-786	52	80-07-765	10.3	80-07-805	10.3	84-50-006	8.5
6 x 25	84-40-561	4.6	80-07-787	57	80-07-765	10.3	80-07-805	10.3	84-50-006	8.5
6 x 30	84-40-561	4.6	80-07-788	62	80-07-765	10.3	80-07-805	10.3	84-50-006	8.5
6 x 35	84-40-561	4.6	80-07-789	67	80-07-765	10.3	80-07-805	10.3	84-50-006	8.5
6 x 40	84-40-561	4.6	80-07-789	67	80-07-765	10.3	80-07-805	10.3	84-50-006	8.5
5										
7.1 x 10	84-40-561	4.6	80-07-783	42	80-07-765	10.3	80-07-805	10.3	84-50-071	9.5
7.1 x 12	84-40-561	4.6	80-07-784	44	80-07-765	10.3	80-07-805	10.3	84-50-071	9.5
7.1 x 15	84-40-561	4.6	80-07-785	47	80-07-765	10.3	80-07-805	10.3	84-50-071	9.5
7.1 x 20	84-40-561	4.6	80-07-786	52	80-07-766	10.3	80-07-806	10.3	84-50-071	9.5
7.1 x 25	84-40-561	4.6	80-07-787	57	80-07-766	10.3	80-07-806	10.3	84-50-071	9.5
7.1 x 30	84-40-561	4.6	80-07-788	62	80-07-766	10.3	80-07-806	10.3	84-50-071	9.5
7.1 x 35	84-40-561	4.6	80-07-789	67	80-07-766	10.3	80-07-806	10.3	84-50-071	9.5
7.1 x 40	84-40-561	4.6	80-07-789	67	80-07-766	10.3	80-07-806	10.3	84-50-071	9.5
8 x 10	84-40-561	4.6	80-07-783	42	80-07-765	10.3	80-07-805	10.3	84-50-008	9.5
8 x 12	84-40-561	4.6	80-07-784	44	80-07-765	10.3	80-07-805	10.3	84-50-008	9.5
8 x 15	84-40-561	4.6	80-07-785	47	80-07-765	10.3	80-07-805	10.3	84-50-008	9.5
8 x 20	84-40-561	4.6	80-07-786	52	80-07-766	10.3	80-07-806	10.3	84-50-008	9.5
8 x 25	84-40-561	4.6	80-07-787	57	80-07-766	10.3	80-07-806	10.3	84-50-008	9.5
8 x 30	84-40-561	4.6	80-07-788	62	80-07-766	10.3	80-07-806	10.3	84-50-008	9.5
8 x 35	84-40-561	4.6	80-07-789	67	80-07-766	10.3	80-07-806	10.3	84-50-008	9.5
8 x 40	84-40-561	4.6	80-07-789	67	80-07-766	10.3	80-07-806	10.3	84-50-008	9.5

☞

◆ **When selecting the equipment, take the notices from chapter *10.2 Adjusting the Working Position - Determining the protrusion (see page 24) into account.***

©HBS Bolzenschweiss-Systeme GmbH & Co. KG

All rights reserved – Reprinting, in whole or in part, only with the approval of the manufacturer

Automatic Equipment Part

for stud length
to approx. 12 mm:

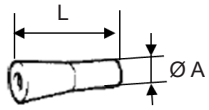

L = 21 mm

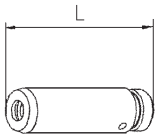

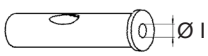

Ø I = Inner Ø

Ø I = Inner Ø

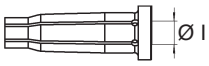

Ø I = Inner Ø

for stud length
from approx. 12 mm:

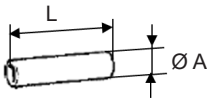

L = 21 mm

Stud dimension	Pos. 10		Pos. 9		Pos. 8		Pos. 12		Pos. 7	
Ø x Length in mm	Plunger	Outside Ø Ø A in mm	Pin stop	Length L in mm	Guide sleeve	Inner Ø Ø I in mm	Feed tube VBZ	Inner Ø Ø I in mm	Chuck	Inner Ø Ø I in mm
3 x 8	84-40-531	2.5	80-07-782	40	80-07-761	5.3	80-08-161	5.3	84-50-003	5.5
3 x 10	84-40-531	2.5	80-07-783	42	80-07-761	5.3	80-08-161	5.3	84-50-003	5.5
3 x 12	84-40-531	2.5	80-07-784	44	80-07-761	5.3	80-08-161	5.3	84-50-003	5.5
3 x 15	84-40-531	2.5	80-07-785	47	80-07-761	5.3	80-08-161	5.3	84-50-003	5.5
3 x 20	84-40-561	4.6	80-07-786	52	80-07-762	6.3	80-08-162	6.3	84-50-003	5.5
3 x 25	84-40-561	4.6	80-07-787	57	80-07-762	6.3	80-08-162	6.3	84-50-003	5.5
3 x 30	84-40-561	4.6	80-07-788	62	80-07-765	10.3	80-08-165	10.3	84-50-003	5.5
3 x 35	84-40-561	4.6	80-07-789	67	80-07-765	10.3	80-08-165	10.3	84-50-003	5.5
3 x 40	84-40-561	4.6	80-07-789	67	80-07-765	10.3	80-08-165	10.3	84-50-003	5.5
4 x 8	84-40-531	2.5	80-07-782	40	80-07-762	6.3	80-08-162	6.3	84-50-004	6.5
4 x 10	84-40-531	2.5	80-07-783	42	80-07-762	6.3	80-08-162	6.3	84-50-004	6.5
4 x 12	84-40-531	2.5	80-07-784	44	80-07-762	6.3	80-08-162	6.3	84-50-004	6.5
4 x 15	84-40-531	2.5	80-07-785	47	80-07-762	6.3	80-08-162	6.3	84-50-004	6.5
4 x 20	84-40-561	4.6	80-07-786	52	80-07-763	7.3	80-08-163	7.3	84-50-004	6.5
4 x 25	84-40-561	4.6	80-07-787	57	80-07-763	7.3	80-08-163	7.3	84-50-004	6.5
4 x 30	84-40-561	4.6	80-07-788	62	80-07-765	10.3	80-08-165	10.3	84-50-004	6.5
4 x 35	84-40-561	4.6	80-07-789	67	80-07-765	10.3	80-08-165	10.3	84-50-004	6.5
4 x 40	84-40-561	4.6	80-07-789	67	80-07-765	10.3	80-08-165	10.3	84-50-004	6.5
5 x 8	84-40-531	2.5	80-07-782	40	80-07-763	7.3	80-08-163	7.3	84-50-005	7.5
5 x 10	84-40-531	2.5	80-07-783	42	80-07-763	7.3	80-08-163	7.3	84-50-005	7.5
5 x 12	84-40-531	2.5	80-07-784	44	80-07-763	7.3	80-08-163	7.3	84-50-005	7.5
5 x 15	84-40-561	4.6	80-07-785	47	80-07-763	7.3	80-08-163	7.3	84-50-005	7.5
5 x 20	84-40-561	4.6	80-07-786	52	80-07-765	10.3	80-08-165	10.3	84-50-005	7.5
5 x 25	84-40-561	4.6	80-07-787	57	80-07-765	10.3	80-08-165	10.3	84-50-005	7.5
5 x 30	84-40-561	4.6	80-07-788	62	80-07-765	10.3	80-08-165	10.3	84-50-005	7.5
5 x 35	84-40-561	4.6	80-07-789	67	80-07-765	10.3	80-08-165	10.3	84-50-005	7.5
5 x 40	84-40-561	4.6	80-07-789	67	80-07-765	10.3	80-08-165	10.3	84-50-005	7.5

All rights reserved – Reprinting, in whole or in part, only with the approval of the manufacturer

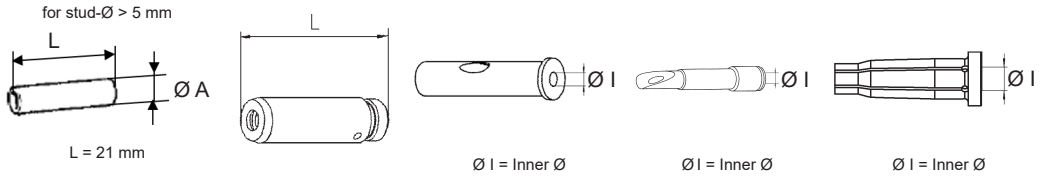

Stud dimension	Pos. 10		Pos. 9		Pos. 8		Pos. 12		Pos. 7	
Ø x Length in mm	Plunger	Outside Ø Ø A in mm	Pin stop	Length L in mm	Guide sleeve	Inner Ø Ø I in mm	Feed tube VBZ	Inner Ø Ø I in mm	Chuck	Inner Ø Ø I in mm
6 x 8	84-40-561	4.6	80-07-782	40	80-07-764	8.3	80-08-164	8.3	84-50-006	8.5
6 x 10	84-40-561	4.6	80-07-783	42	80-07-764	8.3	80-08-164	8.3	84-50-006	8.5
6 x 12	84-40-561	4.6	80-07-784	44	80-07-764	8.3	80-08-164	8.3	84-50-006	8.5
6 x 15	84-40-561	4.6	80-07-785	47	80-07-764	8.3	80-08-164	8.3	84-50-006	8.5
6 x 20	84-40-561	4.6	80-07-786	52	80-07-765	10.3	80-08-165	10.3	84-50-006	8.5
6 x 25	84-40-561	4.6	80-07-787	57	80-07-765	10.3	80-08-165	10.3	84-50-006	8.5
6 x 30	84-40-561	4.6	80-07-788	62	80-07-765	10.3	80-08-165	10.3	84-50-006	8.5
6 x 35	84-40-561	4.6	80-07-789	67	80-07-765	10.3	80-08-165	10.3	84-50-006	8.5
6 x 40	84-40-561	4.6	80-07-789	67	80-07-765	10.3	80-08-165	10.3	84-50-006	8.5
7.1 x 10	84-40-561	4.6	80-07-783	42	80-07-765	10.3	80-08-165	10.3	84-50-071	9.5
7.1 x 12	84-40-561	4.6	80-07-784	44	80-07-765	10.3	80-08-165	10.3	84-50-071	9.5
7.1 x 15	84-40-561	4.6	80-07-785	47	80-07-765	10.3	80-08-165	10.3	84-50-071	9.5
7.1 x 20	84-40-561	4.6	80-07-786	52	80-07-766	10.3	80-08-981	10.3	84-50-071	9.5
7.1 x 25	84-40-561	4.6	80-07-787	57	80-07-766	10.3	80-08-981	10.3	84-50-071	9.5
7.1 x 30	84-40-561	4.6	80-07-788	62	80-07-766	10.3	80-08-981	10.3	84-50-071	9.5
7.1 x 35	84-40-561	4.6	80-07-789	67	80-07-766	10.3	80-08-981	10.3	84-50-071	9.5
7.1 x 40	84-40-561	4.6	80-07-789	67	80-07-766	10.3	80-08-981	10.3	84-50-071	9.5
8 x 10	84-40-561	4.6	80-07-783	42	80-07-765	10.3	80-08-165	10.3	84-50-008	9.5
8 x 12	84-40-561	4.6	80-07-784	44	80-07-765	10.3	80-08-165	10.3	84-50-008	9.5
8 x 15	84-40-561	4.6	80-07-785	47	80-07-765	10.3	80-08-165	10.3	84-50-008	9.5
8 x 20	84-40-561	4.6	80-07-786	52	80-07-766	10.3	80-08-981	10.3	84-50-008	9.5
8 x 25	84-40-561	4.6	80-07-787	57	80-07-766	10.3	80-08-981	10.3	84-50-008	9.5
8 x 30	84-40-561	4.6	80-07-788	62	80-07-766	10.3	80-08-981	10.3	84-50-008	9.5
8 x 35	84-40-561	4.6	80-07-789	67	80-07-766	10.3	80-08-981	10.3	84-50-008	9.5
8 x 40	84-40-561	4.6	80-07-789	67	80-07-766	10.3	80-08-981	10.3	84-50-008	9.5

☞

◆ **When selecting the equipment, take the notices from chapter *10.2 Adjusting the Working Position - Determining the protrusion (see page 24) into account.***

©HBS Bolzenschweiss-Systeme GmbH & Co. KG

All rights reserved – Reprinting, in whole or in part, only with the approval of the manufacturer

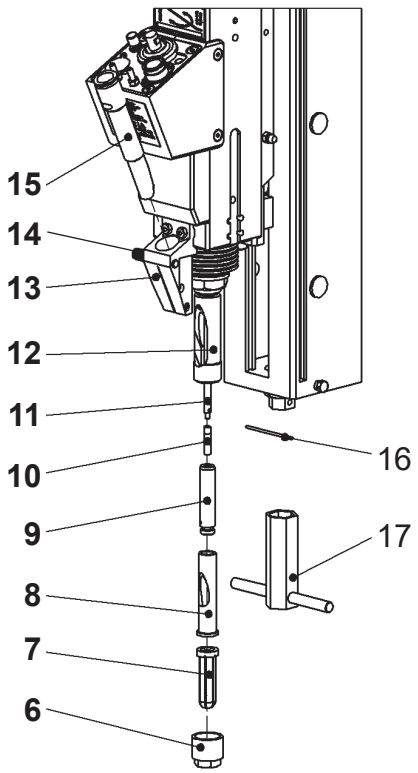

- Select the change-over parts suitable for your welding element.
- Unscrew the retaining nut *(pos. 6)* from the slot piston *(pos. 12)* with the WAF 17 socket wrench.
- Use air connection B to apply a short pulse of air to the automatic welding head to move the piston rod *(pos. 11)* to the front end position. (Any equipment in the automatic welding head is pressed out.)
- Insert the pin *(pos. 16)* into the cross hole of the piston rod and use pliers to carefully tighten the plunger *(pos. 10)*.
- Screw the pin stop *(pos. 9)* with the pin *(pos. 16)* onto the guide sleeve *(pos. 8)*.
- Push the unit *(pos. 8/9)* into the slot piston. The correct position is ensured by the guide pin in the slot piston and the groove in the guide sleeve.

STOP

- Note that, when correctly assembled, the unit *(pos. 8/9)* is inserted completely into the slot piston *(pos. 12)*.

- Place the chuck *(pos. 7)* in the slot piston *(pos. 12)* and secure it with the retaining nut *(pos. 6)*.

All rights reserved – Reprinting, in whole or in part, only with the approval of the manufacturer

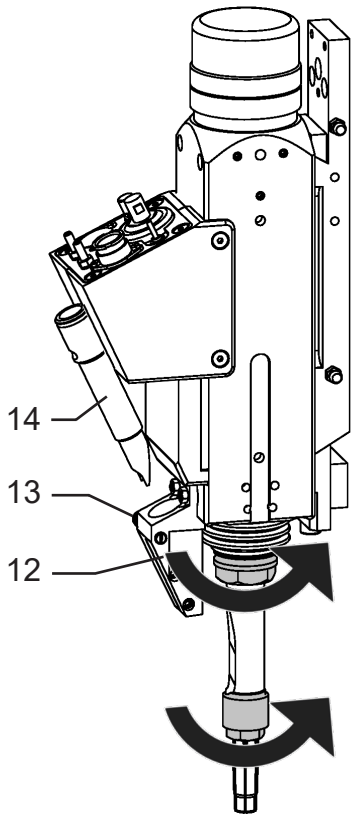

Recommended tightening torques:

Tension nut:

Tightening torque: 22 Nm

Retaining nut:

Tightening torque: 14 Nm

A loose retaining nut will damage the chuck, the slot piston and the retaining nut.

- Press the trigger pin *(pos. 14)* and insert the feed tube *(pos. 15)* into the holder *(pos. 13)*. Make sure that the trigger pin springs back to the rest position; the feed tube is then correctly inserted and secured.
- You can now connect the blue air connection.

©HBS Bolzenschweiss-Systeme GmbH & Co. KG

All rights reserved – Reprinting, in whole or in part, only with the approval of the manufacturer

10.4 Adjusting Welding Parameters

Lift and spring force are dependent on, among other things, the workpiece and welding elements used and their diameters as well as the welding procedure that is used.

The specifications in the following table are guidelines.

◆ Select the applicable parameters for lift and spring force for your workpiece.

All rights reserved – Reprinting, in whole or in part, only with the approval of the manufacturer

Capacitor discharge with gap

Stud welding units			CDMi 2402 *) / CDMi 3202 / CDi 1502 Autom.	
Material of welding elements	Diameter of welding elements metric		Welding parameters KAH 412 LA	
	PT, UT	IT	Lift in mm	Spring force in mm
Material of workpiece: Mild steel (suitable for welding)				
4.8 (suitable for welding)	M3, 3 mm	--	2.0	5
4.8 (suitable for welding)	M4, 4 mm	--	2.0	5
4.8 (suitable for welding)	M5, 5 mm	5 mm, M3	2.0	5
4.8 (suitable for welding)	M6, 6 mm	6 mm, M4	2.0	5
4.8 (suitable for welding)	M8, 7.1 mm	7.1 mm, M5	2.0	5
Material of workpiece: Galvanised steel (suitable for welding)				
4.8 (suitable for welding)	M3, 3 mm	--	1.0	5
4.8 (suitable for welding)	M4, 4 mm	--	1.0	5
4.8 (suitable for welding)	M5, 5 mm	5 mm, M3	1.0	5
4.8 (suitable for welding)	M6, 6 mm	6 mm, M4	1.0	5
4.8 (suitable for welding)	M8, 7.1 mm	7.1 mm, M5	1.0	5
Material of workpiece: Alloyed steel (suitable for welding)				
A2-50	M3, 3 mm	--	2.0	5
A2-50	M4, 4 mm	--	2.0	5
A2-50	M5, 5 mm	5 mm, M3	2.0	5
A2-50	M6, 6 mm	6 mm, M4	2.0	5
A2-50	M8, 7.1 mm	7.1 mm, M5	2.5	5
Material of workpiece: Alloyed steel (suitable for welding)				
CuZn37	M3, 3 mm	--	2.0	5
CuZn37	M4, 4 mm	--	2.0	5
CuZn37	M5, 5 mm	5 mm, M3	2.0	5
CuZn37	M6, 6 mm	6 mm, M4	2.0	5
CuZn37	M8, 7.1 mm	7.1 mm, M5	2.5	5
Material of workpiece: Aluminium				
AlMg3	M3, 3 mm	--	2.5	5
AlMg3	M4, 4 mm	--	2.5	5
AlMg3	M5, 5 mm	5 mm, M3	3.0	5
AlMg3	M6, 6 mm	6 mm, M4	3.5	5
AlMg3	M8, 7.1 mm	7.1 mm, M5	4.0	5

*) 99 000 mF

©HBS Bolzenschweiss-Systeme GmbH & Co. KG

All rights reserved – Reprinting, in whole or in part, only with the approval of the manufacturer

Stud welding with drawn arc under shielding gas

Stud welding units			ARC 800 Automatic version	
Material of welding elements	Diameter of welding elements Metric		Welding parameters KAH 412 LA	
	PT, UT	IT	Lift in mm	Spring force in mm
Material of workpiece: Mild steel (suitable for welding)				
4.8 (suitable for welding)	M3, 3 mm	--	1.0	5
4.8 (suitable for welding)	M4, 4 mm	--	1.0	5
4.8 (suitable for welding)	M5, 5 mm	5 mm, M3	1.0	5
4.8 (suitable for welding)	M6, 6 mm	6 mm, M4	1.0	5
4.8 (suitable for welding)	M8, 7.1 mm	7.1 mm, M5	1.5	5
Material of workpiece: Galvanised steel (suitable for welding)				
4.8 (suitable for welding)	M3, 3 mm	--	1.2	5
4.8 (suitable for welding)	M4, 4 mm	--	1.2	5
4.8 (suitable for welding)	M5, 5 mm	5 mm, M3	1.4	5
4.8 (suitable for welding)	M6, 6 mm	6 mm, M4	1.4	5
4.8 (suitable for welding)	M8, 7.1 mm	7.1 mm, M5	2.0	5
Material of workpiece: Alloyed steel (suitable for welding)				
A2-50	M3, 3 mm	--	1.0	5
A2-50	M4, 4 mm	--	1.0	5
A2-50	M5, 5 mm	5 mm, M3	1.0	5
A2-50	M6, 6 mm	6 mm, M4	1.0	5
A2-50	M8, 7.1 mm	7.1 mm, M5	1.5	5

All rights reserved – Reprinting, in whole or in part, only with the approval of the manufacturer

Drawn-arc stud welding

Stud welding units			IT 90 / IT 1002	
Material of welding elements	Diameter of welding elements Metric		Welding parameters KAH 412 LA	
	PT, UT	IT	Lift in mm	Spring force in mm
Material of workpiece: Mild steel (suitable for welding)				
4.8 (suitable for welding)	M3, 3 mm	--	1.0	5
4.8 (suitable for welding)	M4, 4 mm	--	1.0	5
4.8 (suitable for welding)	M5, 5 mm	5 mm, M3	1.2	5
4.8 (suitable for welding)	M6, 6 mm	6 mm, M4	1.4	5
4.8 (suitable for welding)	M8, 7.1 mm	7.1 mm, M5	1.6	5
Material of workpiece: Galvanised steel (suitable for welding)				
4.8 (suitable for welding)	M3, 3 mm	--	1.2	5
4.8 (suitable for welding)	M4, 4 mm	--	1.2	5
4.8 (suitable for welding)	M5, 5 mm	5 mm, M3	1.4	5
4.8 (suitable for welding)	M6, 6 mm	6 mm, M4	1.8	5
4.8 (suitable for welding)	M8, 7.1 mm	7.1 mm, M5	2.0	5
Material of workpiece: Alloyed steel (suitable for welding)				
A2-50	M3, 3 mm	--	1.0	5
A2-50	M4, 4 mm	--	1.0	5
A2-50	M5, 5 mm	5 mm, M3	1.2	5
A2-50	M6, 6 mm	6 mm, M4	1.4	5
A2-50	M8, 7.1 mm	7.1 mm, M5	1.6	5
Material of workpiece: Aluminium				
AlMg3	M3, 3 mm	--	1.2	5
AlMg3	M4, 4 mm	--	1.2	5
AlMg3	M5, 5 mm	5 mm, M3	1.4	5
AlMg3	M6, 6 mm	6 mm, M4	1.6	5
AlMg3	M8, 7.1 mm	7.1 mm, M5	1.8	5

©HBS Bolzenschweiss-Systeme GmbH & Co. KG

All rights reserved – Reprinting, in whole or in part, only with the approval of the manufacturer

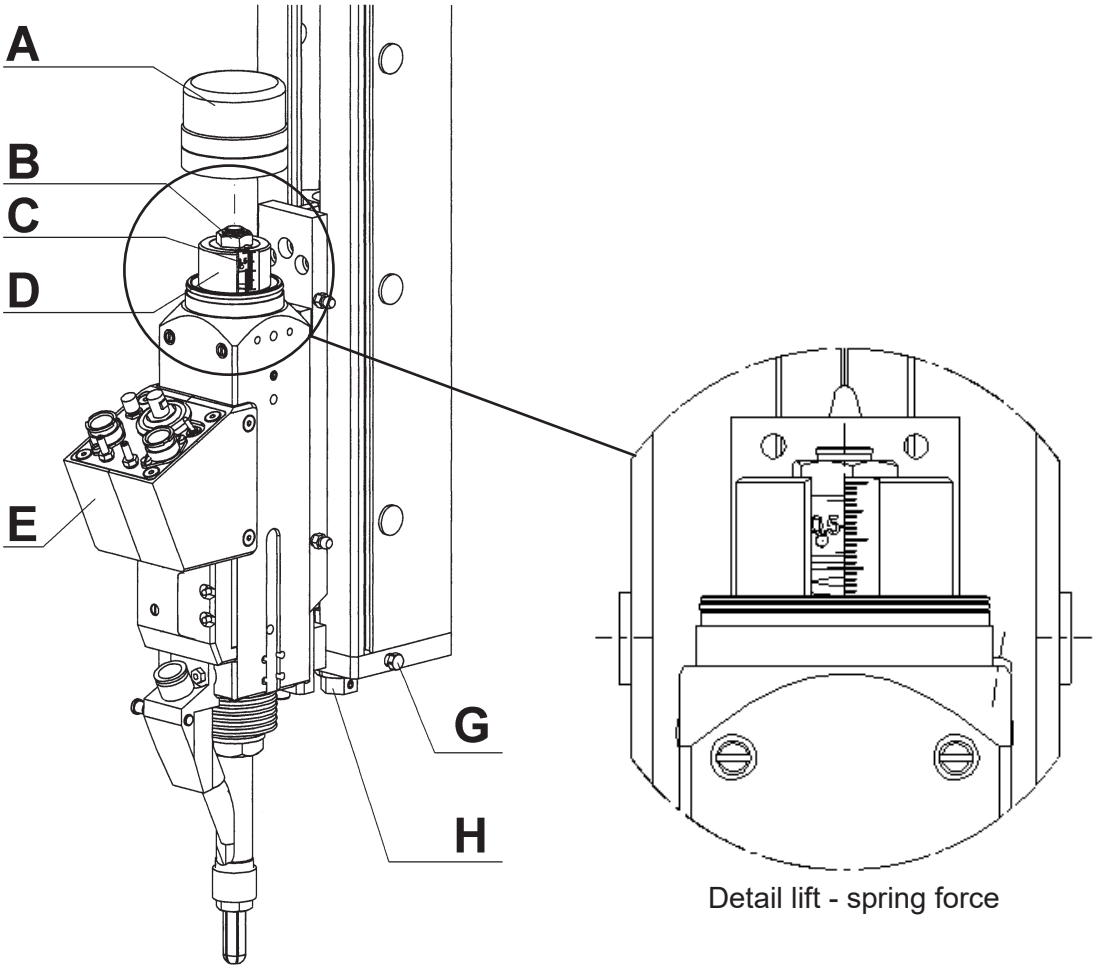

A - Rear cap

B - Spring-force adjustment screw

C - Display of spring force

D - Lift adjustment screw

E - Connection casing

G - Locking screw for height adjustment

H - Height adjustment

All rights reserved – Reprinting, in whole or in part, only with the approval of the manufacturer

Adjusting spring force

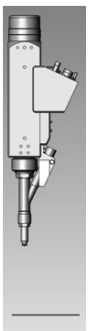

◆ Move the Z-axis (in setup mode) to the home position.

◆ Remove the rear cap.

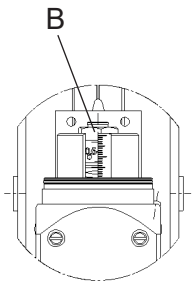

◆ Set the spring force according to your welding parameters (e.g. spring force = 5 mm).

◆ To do this, turn the spring-force adjustment screw (B) with a WAF 17 socket wrench to the value that is to be set.

The scale makes use of a vernier scale.

0.5 on the scale means: each 0.5 mm of spring force is equal to one half turn of the adjustment screw:

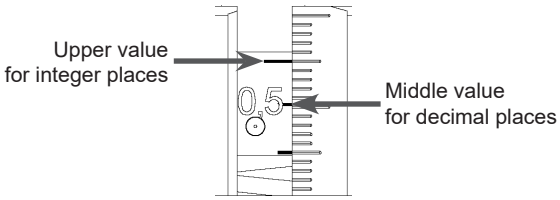

The currently applied spring force is shown on the display for spring-force adjustment, in this example 5 mm.

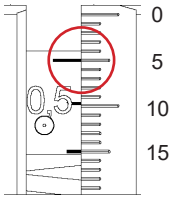

◆ Mount the rear cap.

©HBS Bolzenschweiss-Systeme GmbH & Co. KG
All rights reserved – Reprinting, in whole or in part, only with the approval of the manufacturer

Adjusting the lift

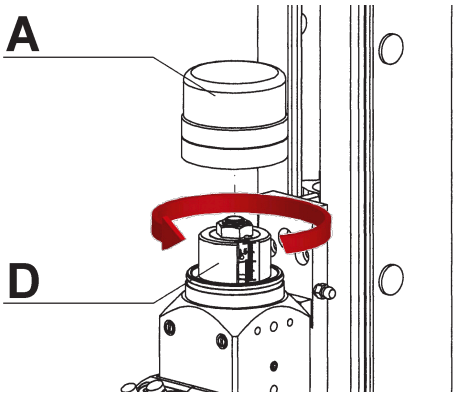

- Remove the rear cap (A).
- Turn the lift adjustment screw (D) in base position up to the stop to the left.

Now you achieved the minimum lift value of 0.5 mm.

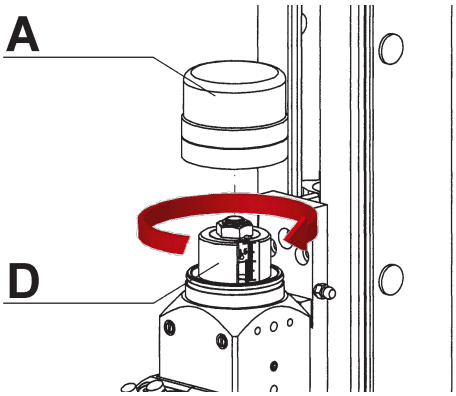

- Set the lift according to your welding parameters.
- To do this, turn the lift adjustment screw (D) to the right.

Lift can be adjusted **arresting by steps of 0.1 mm**.

- Mount the rear cap (A) again.

☞ **Total piston stroke is 7 mm. If the insertion depth is 2 mm, you can lift max 5 mm.**

☞ **The lift must be checked following each change of workpiece or stud.**

☞ ◆ **When adjusting the lift, take the notices from chapter *10.2 Adjusting the Working Position - Determining the protrusion (see page 24) into account*.**

- Before starting work, always check the automatic welding head for ease of movement of the function unit by manually deflecting the chuck in the axial direction.
- Remove weld spatter from the chuck and slot piston.

All rights reserved – Reprinting, in whole or in part, only with the approval of the manufacturer

11 Welding

- **Work according to the *original operating manual of the HBS stud welding unit*.**

Danger if used other than for the intended purpose

- Use the welding head only for CD stud welding or ARC stud welding and only in combination with stud welding units from manufacturer:

HBS Bolzenschweiss-Systeme GmbH & Co. KG
Felix-Wankel-Strasse 18
85221 Dachau
GERMANY

- Always check with the operating manual of your stud welding unit whether this welding head may be used.

©HBS Bolzenschweiss-Systeme GmbH & Co. KG
All rights reserved – Reprinting, in whole or in part, only with the approval of the manufacturer

12 Troubleshooting

Danger from insufficiently qualified operating personnel

- Carry out only the work described here on your stud welding unit or stud welding head.
- Repairs may only be carried out by appropriately qualified personnel.
- Inform your dealer or your maintenance department.

Fault	Possible cause	Fault localisation	Fault remedy	Performance
Welding elements not firmly attached	Wrong welding parameters selected	Check adjustments on stud welding unit	Change adjusted parameters	Trained personnel
		Check stroke of automatic welding head	Change adjusted parameters	Trained personnel
	Plunging speed of welding element too low	Check welding piston and linear bearing for ease of movement *)	Clean or replace *)	Qualified specialists
Scorching at welded element	Chuck is worn	Check chuck for possible wear	Replace chuck	Trained personnel
Automatic welding head does not weld	Control cable defective (with present contact signal on stud welding unit)	Check contol cable at socket (Pin 3 and 4) of the control cable socket with pressed automatic welding head trigger *)	In case of no signal: Replace control cable *)	Qualified specialists
	Trigger defective (with present contact signal on stud welding unit)	Check contol cable at socket (Pin 3/4) of the control cable socket with pressed automatic welding head trigger *)	In case of no signal: Replace micro switch *)	Qualified specialists
	Welding current cable defective (no contact signal on stud welding unit)	Check, whether welding current cable is connected to stud welding unit in a technically correct way	Connect welding current cable	Trained personnel
		Check welding current cable for electrical flow *)	In case of no flow: Replace welding current cable and/or connecting cable *)	Qualified specialists

All rights reserved – Reprinting, in whole or in part, only with the approval of the manufacturer

Fault	Possible cause	Fault localisation	Fault remedy	Performance
Automatic welding head does not weld	Ground connection defective (no contact signal on stud welding unit)	Check, whether ground cable is connected to workpiece in a technically correct way	Connect ground cable	Trained personnel
		Check ground cable for electrical flow *)	In case of no flow: Replace ground cable *)	Qualified specialists
	Stud welding unit defective	Follow the instructions of the connected stud welding unit	Repair required	Factory service or authorized agencies

Work marked with *) may only be carried out by qualified electricians!

- Please contact our Service department if none of the measures described remedies the situation.
- Please use the form „Service & Support“ in the annex to send in the stud welding unit or welding head.

©HBS Bolzenschweiss-Systeme GmbH & Co. KG

All rights reserved – Reprinting, in whole or in part, only with the approval of the manufacturer

13 Maintenance and Care

Electric shock hazard

- Never perform maintenance and care on your welding head if it is still connected to the stud welding unit.
- First unplug the welding head on the stud welding unit.

Danger from insufficiently qualified operating personnel

- Carry out only the work described here on your welding head.
- Repairs may only be carried out by appropriately qualified personnel.
- Inform your dealer or your maintenance department.

13.1 Cleaning

- Clean the casing of your welding head with a slightly damp cloth if necessary.

- **Do not use solvents for cleaning.**

  These can damage the used plastic components.

Switch the mains switch of the stud welding unit off and unplug the welding head before cleaning the automatic welding head.

- **Do not use compressed air for cleaning.**

  Flying dust particles could be inhaled.

The following maintenance recommendations cannot account for the unique situation at your site.

- **For this reason, you should create in-house maintenance instructions.**

All rights reserved – Reprinting, in whole or in part, only with the approval of the manufacturer

	Shift	Day	Week	Every two months	Every six months		
Maintenance recommendations	**S**	**T**	**W**	**2M**	**6M**	**Work to be performed**	**To be performed by**
Power and control cable connections	x					Check for secure seating	Trained personnel
Chuck		x					Trained personnel
Guide sleeve			x				Trained personnel
Plunger			x				Trained personnel
Feed tube			x				Trained personnel
Pin stop			x				Trained personnel
Feeding tube		x				- Check for kinks - Check feeding tube for secure seating in the hose coupling - Check for wear	Trained personnel
Clean the automatic welding head			x			Clean with vacuum cleaner or with a cloth, never clean with a compressed-air cleaner	Trained personnel
Adjustment of the automatic welding head			x				Trained personnel
Clean and grease the piston rod			x			With Amblygon TA 15/2	Trained personnel

©HBS Bolzenschweiss-Systeme GmbH & Co. KG
All rights reserved – Reprinting, in whole or in part, only with the approval of the manufacturer

13.2 Inspection and Tests

- Inspect your chuck prior to every use.
- Replace the chuck if you discover burning marks on the welding element and/or on the chuck.
- Before every use, inspect the bellows on the front part of the automatic welding head for proper assembly and/or damage.

STOP

- **Never work with damaged or incorrectly seated bellows.**

  This will contribute to a long service life of your welding head.

- Inform your dealer or maintenance department if you discover any damage.

- Prior to every use, check whether the type designations and adjustment aids on the welding head are still legible.
- Clean the type plates in the event of soiling.
- Replace any type plates that are damaged or no longer legible.

All rights reserved – Reprinting, in whole or in part, only with the approval of the manufacturer

13.3 Removing Equipment

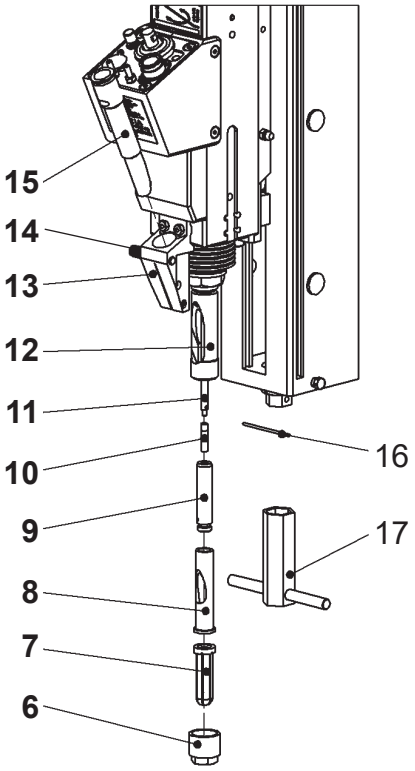

- Move the welding head to a suitable working position.
- Switch off the CNC system.
- Unplug the blue air hose on the stud welding unit.
- Unscrew the retaining nut *(pos. 6)* with a WAF 17 socket wrench *(pos. 17)*.
- Remove the chuck *(pos. 7)*.
- Apply a short pulse of air on the blue air hose and thereby drive out the guide sleeve *(pos. 8)* and the pin stop *(pos. 9)*.
- Press the trigger pin *(pos. 14)* and pull out the feed tube *(pos. 15)*.

- Replace defective or worn consumable parts.
- Pay particular attention to soiling in parts 8, 9 and 15.

Soiling can prevent studs from being transported into the chuck.

©HBS Bolzenschweiss-Systeme GmbH & Co. KG
All rights reserved – Reprinting, in whole or in part, only with the approval of the manufacturer

13.4 Dismounting the Welding Head

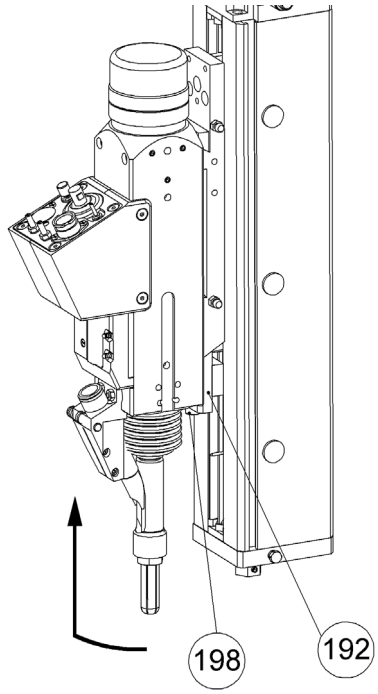

- Move the welding head to a suitable working position.
- Switch off the CNC system.
- Disconnect all connections on the welding head.
- Loosen the screw for the dovetail mount *(pos. 198)*.
- Remove the welding head.

☞ **After installing the welding head in a CNC system, the position of the welding head must be checked and re-aligned if necessary.**

For this purpose, we recommend using the HBS adjustment set for the welding head position.

All rights reserved – Reprinting, in whole or in part, only with the approval of the manufacturer

14 Storage

- Store the welding head in a safe and dust-free location when not in use.
- Protect the welding head from moisture and metallic contamination.

- Store the welding head only under the following ambient conditions.

Storage temperature:

-5 °C to +50 °C

Relative humidity:

0 % - 50 % at +40 °C
0 % - 90 % at +20 °C

15 Disposal

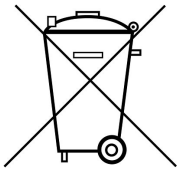

- Dispose of the welding head only via the manufacturer or a specialist disposal company.
- Never dispose of the welding head in the domestic refuse.

©HBS Bolzenschweiss-Systeme GmbH & Co. KG
All rights reserved – Reprinting, in whole or in part, only with the approval of the manufacturer

Declaration of Incorporation of partly completed Machinery

to Directive 2006/42/EC, Annex II 1 B
(Original Declaration of Incorporation)

Herewith the manufacturer

HBS Bolzenschweiss-Systeme GmbH & Co. KG
Felix-Wankel-Strasse 18
P.O. Box 13 46
85221 Dachau
GERMANY

Phone +49 8131 511-0
Fax +49 8131 511-100

declares for the following product

Machine information: Automatic Welding Head
Type: KAH 412 LA
Order No: 94-37-412A
Serial No: 94-37-412A/233XXXX
Year of manufacture: 2023

that the following essential requirements of the above mentioned Directive – including changes to the Directive to be applied at the moment of this declaration – were applied and fulfilled:

Annex I, Article 1, 1.1.2, 1.1.3, 1.1.5, 1.1.6, 1.2.1, 1.2.2, 1.2.3, 1.2.4.1, 1.2.6, 1.3.1, 1.3.2, 1.3.3, 1.3.4, 1.3.7, 1.3.8, 1.3.9, 1.4.1, 1.4.2.1, 1.5.1, 1.5.2, 1.5.4, 1.5.5, 1.5.6, 1.5.8, 1.5.10, 1.5.11, 1.5.16, 1.6.1, 1.6.2, 1.6.3, 1.6.4, 1.7.1.1, 1.7.2, 1.7.3, 1.7.4,

that special technical documentation was compiled in accordance with Part B of Annex VII of the above mentioned regulation and will be transmitted, in response to a reasoned request by the national authorities as follows:

The above mentioned documents will be transmitted by e-mail as a data file in German language.

that this partly completed machinery must not be put into service until the final machinery into which it is to be incorporated has been declared in conformity with the provisions of the Directive, where appropriate.

that this incomplete machine complies with corresponding regulations of the following additional EU Directives, including any changes to be applied at the moment of this declaration:

„Electromagnetic compatibility“ 2014/30/EU

Protection targets of the low voltage regulation were kept to appendix I, no. 1.5.1 of the machine regulation.

Persons who are based in the European community and who are authorised to compile the technical documentation:

Name: Heike Otto Address: see manufacturer

Dachau, 02.01.2023
Place of issue, Date

Anja Bloch (CEO HBS)

©HBS Bolzenschweiss-Systeme GmbH & Co. KG

All rights reserved – Reprinting, in whole or in part, only with the approval of the manufacturer

Service & Support

With the return please attach a copy of the filled out form together with the repair number given by HBS! Repairs without repair number will not be processed.

Repair number
(given by HBS)

_____

Company: _____
Name / Surname: _____
Street: _____
City, State and ZIP/Postcode: _____
Country: _____
Phone & Fax: _____
E-mail address: _____

Stud welding unit / stud welding gun type of model: _____
Serial number: _____
Date of purchase: _____
Purchased at distributor: _____

Detailed descriptions of errors: _____

Service & Support may be done up to the value of EUR _____ without quotation: ☐ Yes ☐ No

Could you find any damage / burn marks

on the cables: ☐ Yes ☐ No

on chucks: ☐ Yes ☐ No

Are all plug and screw connections tightly fastened *: ☐ Yes ☐ No

Are there any burn marks on plug or screw connections: ☐ Yes ☐ No

Is there any other visual damage (e.g. cracks, dents): ☐ Yes ☐ No

Have you checked the fuses: ☐ Yes ☐ No

Default on the display of the stud welding unit:

ARC / IT					CD / CDM / SC					
○	⊗				●		⊗			**

Which LED´s are illuminated (please mark with a cross)?

Please e-mail or fax this form to service@hbs-info.de or fax: +49 8131 511-100.
In case a repair is necessary a repair number will be given!

* See also operating manual chapter „Connection“
** Doesn´t light when using a contact welding gun

©HBS Bolzenschweiss-Systeme GmbH & Co. KG
All rights reserved – Reprinting, in whole or in part, only with the approval of the manufacturer

Index

A
accessories 13
adjusting spring force 38
adjusting the lift 39
adjusting welding parameters 33
airborne particulates 7
automatic welding head. 12

B
bang. 8
basic configuration. 13

C
capacitor 12
cleaning 43
clothing, non-flammable 8
components 18

D
danger from incorrect use 6
Declaration of Incorporation 49
dimensional drawing 15
disposal 48

E
ear protection. 10
electrical hazards. 10
electric arc 12
electromagnetic fields 10
EMF directive, safety notices. 9

F
fire extinguisher 8
fire hazard 8
form „Service & Support“. 42, 50
full-ear hearing protection 8
fumes, harmful to health 7

G
glossary 12
goggles with visor 8

H
hazards for the machine 10
hazards for the operator 10
heart pacemaker 7, 10
helmet 8

I
inspection and tests. 45
intended use 16, 40

M
main assemblies 18
maintenance and care. 43

O
operating manual. 13

P
protective apron. 8
protective equipment 8
protective equipment, personal 10
protective gloves 8

R
rectifier. 12

S
safety goggles 10
safety goggles with sight glass 8
safety precautions 6
scope of supply 13
standardised stud welding elements 16
storage. 48
storage temperature 48
stud feeder. 12
stud welding gun 12
stud welding system 12
stud welding unit 12
symbols used. 10

T
tightening torques 32
troubleshooting 41
type plate 19

W
warranty entitlement 17
welding element. 12
welding parameters 12
workpiece 12

All rights reserved – Reprinting, in whole or in part, only with the approval of the manufacturer

©HBS Bolzenschweiss-Systeme GmbH & Co. KG
All rights reserved – Reprinting, in whole or in part, only with the approval of the manufacturer

HBS Bolzenschweiss-Systeme GmbH & Co. KG
Felix-Wankel-Strasse 18 • 85221 DACHAU • GERMANY
Phone +49 8131 511-0 • Fax +49 8131 511-100 • E-mail international@hbs-info.com

www.hbs-info.com