ACCU-TWIN

Stud welding unit

92-10-2380A

Operating Manual

2021

After-sales service for Germany:

HBS Bolzenschweiss-Systeme GmbH & Co. KG
Felix-Wankel-Strasse 18
85221 DACHAU
GERMANY

Phone	**+49 8131 511-0**
Fax	**+49 8131 511-100**
E-mail	**international@hbs-info.com**
Web	**www.hbs-info.com**

ACCU-TWIN Operating Manual Issue 2021-01 Order No. E-BA 92-10-2380A

Translation of the Original Operating Manual

Please keep the manual in a safe place for future reference.

Transmission and duplication of this document, dissemination and notification of the contents are not permitted unless expressly approved.

All rights, errors and technical amendments reserved.

© HBS Bolzenschweiss-Systeme GmbH & Co. KG

Dear Customer,

Many thanks for buying a stud welding machine from HBS Bolzenschweiss-Systeme.

We at HBS wish you success at all times when working with this stud welding machine.

The high level of quality of our products is guaranteed by ongoing further development in the design, equipment and accessories. This may result in differences between the present operating manual and your product. No claims can therefore be derived from the data, illustrations and descriptions.

We have compiled the data and information in this reference work with the greatest care, and have made every effort to ensure that the information contained in this manual was correct and up-to-date at the time of delivery. We can nevertheless give no guarantee for an absolutely error-free document.

Should you discover any errors or unclear points when reading this operating manual, please do not hesitate to contact us.

We would also be grateful for any feedback should you have any suggestions or complaints to make about our product.

HBS Bolzenschweiss-Systeme GmbH & Co. KG

Felix-Wankel-Strasse 18

85221 Dachau

GERMANY

All rights reserved – Reprinting, in whole or in part, only with the approval of the manufacturer

Table of Contents

1 Important Safety Precautions 6

2 Symbols and Terms Used 10

3 Scope of Supply 13

4 Accessories 14

5 Technical Data 15

6 Intended Use 17

7 Warranty 18

8 Components of the Stud Welding Unit 19

8.1 Main Assemblies 20
8.2 Control Panel and Display 22
8.3 LED Display 23
8.4 Grinder 23

9 Welding Process 24

9.1 Contact Stud Welding 24

10 Preparing Place of Work and Welding Process 26

10.1 Preparing Surfaces 27
10.2 Adjusting and Inspecting the Welding Gun 29

11 Connection 30

12 Welding 31

12.1 Switching on the Stud Welding Unit 32
12.2 Performing the Welding Process 32
12.3 Additional Information ACCU-TWIN 36

©HBS Bolzenschweiss-Systeme GmbH & Co. KG
All rights reserved – Reprinting, in whole or in part, only with the approval of the manufacturer

13 Checking the Quality of the Weld 38

13.1 Carrying out Visual Inspection 38

13.2 Carrying out Bending Test 39

13.3 Blowing Effect and Remedies 41

14 Troubleshooting 42

15 Shutting Down 43

16 Maintenance and Care 44

16.1 Cleaning 44

Maintenance of Accumulators 44

Maintenance Instructions for Chucks 45

16.2 Inspection and Tests 46

16.3 Replacing the Accumulator 47

17 Storage 48

18 Disposal 48

EC Declaration of Conformity 49

Service & Support 50

Index 51

©HBS Bolzenschweiss-Systeme GmbH & Co. KG

All rights reserved – Reprinting, in whole or in part, only with the approval of the manufacturer

1 Important Safety Precautions

The target group for this manual are qualified personnel who in view of their technical training, know-how and experience and their knowledge of the applicable regulations are able to assess the work assigned to them and to recognise potential hazards.

Danger from incorrect use

◆ Use the stud welding unit only for the purpose described in this manual.

Otherwise you may endanger yourself or damage the stud welding unit.

You endanger yourself and others if you operate the stud welding unit incorrectly or fail to observe the safety precautions and warnings. This can lead to serious injury or extensive material damage.

Danger for unauthorised operating personnel

Work with the stud welding unit only when

- You are appropriately trained, instructed and authorised to do so, and
- You have read and completely understood this operating manual.

Never work with the stud welding unit when you are under the influence of

- Alcohol,
- Drugs or
- Medication.

Danger from unauthorised modifications

◆ Never modify the stud welding unit or parts thereof without obtaining a clearance certificate from the manufacturer.

You will otherwise endanger yourself. This can lead to serious injury or extensive material damage.

©HBS Bolzenschweiss-Systeme GmbH & Co. KG

All rights reserved – Reprinting, in whole or in part, only with the approval of the manufacturer

Life-threatening danger for wearers of active implanted cardiac devices

Danger for workers at particular risk within the meaning of the EMF directive

Persons at particular risk within the meaning of the EMF directive are:

– Workers with active implanted medical devices
– Workers with passive implanted medical devices that contain metal
– Workers with medical devices worn on the body
– Pregnant workers.

◆ Never operate the stud welding machine if you are among the group of workers at particular risk within the meaning of the EMF directive.
◆ In this case, never remain in the vicinity of the stud welding machine during welding.
◆ Never operate the stud welding machine if persons are located nearby who are among the group of workers at particular risk within the meaning of the EMF directive.

Strong electromagnetic fields are produced in the vicinity of the stud welding machine during welding. These fields can adversely affect the function of medical devices as well as the course of a pregnancy.

Danger from fumes and airborne particulates

◆ Switch on the welding fume extractor at the place of work.
◆ Ensure that the room is well ventilated.
◆ Never weld in rooms with a ceiling height of less than 2 m.
◆ Observe furthermore your working instructions and the accident prevention regulations.

This will help to avoid health damage due to fumes and airborne particulates.

All rights reserved – Reprinting, in whole or in part, only with the approval of the manufacturer

Danger from glowing metal spatter (fire hazard)

Glowing hot weld spatter and liquid splashes, flashes of light and a loud bang > 90 dB (A) must be anticipated during stud welding.

- Inform colleagues working in the immediate vicinity accordingly before starting work.
- Ensure that an approved fire extinguisher is available at the place of work.
- Do not weld when wearing working clothes soiled with flammable substances such as oil, grease, petroleum, etc.
- Wear your proper protective clothing, such as:
  - Protective gloves in accordance with the relevant standard,
  - Non-flammable clothing,
  - A protective apron over your clothing,
  - Full-ear hearing protection in accordance with the relevant standard,
  - A safety helmet when welding above your head,
  - Safety shoes,
  - Safety goggles with sight glass of protection level 2 in compliance with the applicable standards and do not look directly into the light arc.
- Remove all flammable materials and liquids from the vicinity of the work area before starting welding.
- Weld at a safe distance from flammable materials or liquids. Select a safety distance large enough to ensure that no danger can arise from weld spatter.

Protection of the stud welding unit

- Protect the stud welding unit against the ingress of foreign matter and liquids caused by cutting or grinding work in the vicinity of your place of work.

This will help to prolong the service life of your stud welding unit.

©HBS Bolzenschweiss-Systeme GmbH & Co. KG

All rights reserved – Reprinting, in whole or in part, only with the approval of the manufacturer

Safety notices in accordance with EMF directive 2013/35/EU

Currents flowing through electrical conductors during stud welding cause electric and magnetic fields that can occur, in particular, near the hand-held welding guns, the welding arrangement (e.g., welding cables) and the welding power sources.

Due to the high currents, high EMF exposures may occur.

Danger for workers at particular risk within the meaning of the EMF directive

Persons at particular risk within the meaning of the EMF directive are:

- Workers with active implanted medical devices
- Workers with passive implanted medical devices that contain metal
- Workers with medical devices worn on the body
- Pregnant workers.

Strong electromagnetic fields are produced in the vicinity of the stud welding machine during welding.

To reduce the danger posed by electromagnetic fields, we recommend, among other things, the following rules of conduct:

◆ Lay all cables as close together as possible.

For proper bundling and safeguarding of the cables, HBS offers protective tubes in various sizes.

◆ Do not position yourself between the welding cables.

◆ Only lay the cables to one side and position them as far as possible from the operating personnel.

◆ Do not loop the cables over your body, especially not at head level.

◆ Completely unwind the welding cables.

◆ Use the shortest possible welding cables.

◆ Place portable welding power sources as far away as possible while welding.

◆ If possible, do not operate welding power sources in the immediate vicinity of other persons, do not sit directly next to the welding power source while working and do not lean against it.

◆ In addition to these safety notices, also observe your work instructions and accident prevention regulations.

All rights reserved – Reprinting, in whole or in part, only with the approval of the manufacturer

2 Symbols and Terms Used

The symbols used in this operating manual have the following meanings:

Danger

Warns you of hazards that can lead to **injury of persons** or to **considerable material damage.**

Caution

Problems in operating **may occur** if this information **is not observed.**

No access for people with active implanted cardiac devices

No access for persons with implants made of metal

No access for pregnant women

Danger

Warns you of **electrical** hazards

Danger

Warns you of **electromagnetic fields** that can be generated during welding

These symbols prompt you to wear **personal protective clothing when working with the stud welding unit**.

This symbol prompts you to wear **ear protection**. **A loud bang > 90 dB (A) can occur during the welding process.**

©HBS Bolzenschweiss-Systeme GmbH & Co. KG

All rights reserved – Reprinting, in whole or in part, only with the approval of the manufacturer

Tip

Cross-reference to **useful information** on the use of the stud welding machine

Cross-references in this operating manual are marked with this symbol or ***are printed in italics***

Fire hazard

Have a suitable fire extinguisher for the working area ready before starting work.

◆ **Work instruction**

– **List**

All rights reserved – Reprinting, in whole or in part, only with the approval of the manufacturer

Glossary

Automatic welding head:	Device for welding of welding elements
Capacitor:	Component for storage of electrical energy.
Electric arc:	Autonomous gas discharge between two electrodes when the current is high enough. A whitish light is emitted in the process. The electric arc allows very high temperatures to be generated.
Rectifier:	Electrical component that converts alternating voltage into direct voltage
Stud feeder:	Device for automatic feeding of welding elements
Stud welding gun:	Device for welding of welding elements
Stud welding system:	Stud welding unit including stud welding gun or welding head
Stud welding unit:	Device for provision of the electrical energy for stud welding
Thyristor:	Electronic component for contact-free switching of high currents; switching takes place via the control input
Welding element:	Component such as stud or pin that is welded to the workpiece
Welding parameters:	Mechanical and electrical settings at the stud welding gun or welding head and at the stud welding unit (e.g. spring force, charging voltage)
Workpiece:	Components such as sheet metal or tubes to which the welding elements are to be fastened

©HBS Bolzenschweiss-Systeme GmbH & Co. KG
All rights reserved – Reprinting, in whole or in part, only with the approval of the manufacturer

3 Scope of Supply

The **basic configuration** of your stud welding unit contains the following parts:

No. of pieces	Part	Type	Order No.
1	Stud welding unit	ACCU-TWIN	92-10-2380A
1	Toolbag	ACCU-TWIN	88-25-192
1	Grinding equipment		88-25-441
1	Charging cable for 12 V car connection		88-25-440
1	Assortment box		88-25-444
1	External power supply unit		88-25-692
1	Shoulder strap	ACCU-TWIN	80-10-704
1	Socket wrench	AF 13	80-41-032
1	Operating manual	ACCU-TWIN	E-BA 92-10-2380A

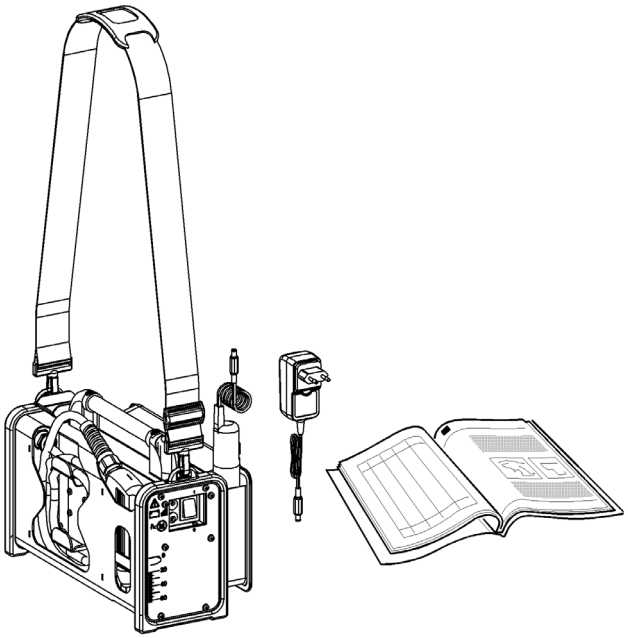

- Inspect the shipment for visible damage and completeness immediately on receipt.
- Report any transport damage or missing components immediately to the delivering shipping agent or the dealer (address, see page 2).

All rights reserved – Reprinting, in whole or in part, only with the approval of the manufacturer

4 Accessories

For example:

Part		Order No.
Clamping nut	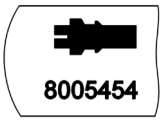	80-05-454
Chuck	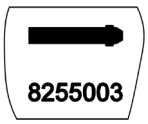	82-55-003
Spark-protection		80-08-124A
Accumulator	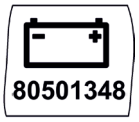	80-50-1348
Toolbag	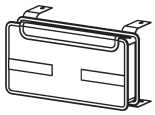	88-25-192
Grinding equipment	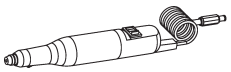	88-25-441
External power supply unit		88-25-692
Charging cable for 12 V car connection		88-25-440
Assortment box	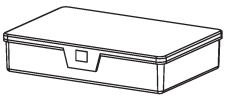	88-25-444

Additional accessories can be found in our extensive accessories catalogue.

©HBS Bolzenschweiss-Systeme GmbH & Co. KG
All rights reserved – Reprinting, in whole or in part, only with the approval of the manufacturer

5 Technical Data

Stud welding unit ACCU-TWIN – Battery Powered Stud Welding Unit
with twin stud welding gun for CD stud welding
according to current standards

Welding range	2 x M3
Welding material	Mild steel, stainless steel (Aluminium only available to a limited extent)
Welding rate	2 twin welds per minute
Capacitance	80 000 µF
Energy	325 Ws
Charging voltage	Max. 90 V
Power source	Capacitor
Capacitor charging time	Approx. 30 s
Battery	12 V, 5 Ah (leakproof)
Battery capacity	200 twin M3 welds
Battery charging time	Max. 10 hours.
Battery life	Min. 200 charging cycles; (no warranty on batteries)
External power supply unit	Connection: 100 - 240 V AC, 50 Hz, 2 A
Stud spacing	Stepless adjustable from 25 mm up to 61 mm (from 19 mm upon request)
Welding gun cable length	Approx. 1.1 m
Dimension L x W x H	360 x 135 x 210 mm (without handle)
Dimension welding gun L x W x H	165 x 25 x 95 mm
Weight	Approx. 7.8 kg (incl. welding gun and accessories)
Weight welding gun	550 g

All rights reserved – Reprinting, in whole or in part, only with the approval of the manufacturer

MICROMOT 50 Grinder

With ball bearing-mounted spindle and tools held using collets

Supply voltage	12 to 18 V direct voltage
Speed range	20 000/min. (non-adjustable)
Dimension D / L	Ø 35 mm / 220 mm
Weight	230 g

Power supply unit

AC/DC power supply unit

Output values	24 W / 12 V / 2 A
Cable length	1.8 m
Plug	EU
Weight	Approx. 220 g

Car adaptor

Output values	12 V
Cable length	2.0 m
Weight	Approx. 80 g

©HBS Bolzenschweiss-Systeme GmbH & Co. KG

All rights reserved – Reprinting, in whole or in part, only with the approval of the manufacturer

6 Intended Use

Our stud welding unit are designed and built exclusively for industrial use. Nonindustrial use is expressly forbidden due to the lack of know-how about the welding technology employed and the applicable standards.

The stud welding unit is intended exclusively for stud welding of standardised welding elements. Any other use will result in the desired strength of the welded joint being reduced.

The intended use also implies compliance with the intervals and conditions for inspection and maintenance of the stud welding unit and the gun employed.

The stud welding unit must be suitable for welding the welding elements in use.

Welding elements manufactured with the cold formed process have a flange and an ignition tip. During welding, the flange prevents the arc getting to the cylindric part of the welding element and increases simultaneously the welding area.

All rights reserved – Reprinting, in whole or in part, only with the approval of the manufacturer

7 Warranty

Please refer to the latest "General Terms and Conditions" for the scope of the warranty.

The warranty does not cover faults caused by e.g.

– Normal wear,
– Improper handling,
– Failure to observe the operating manual,
– Failure to observe the safety precautions,
– Use for other than the intended purpose, or
– Transport damage.

Warranty entitlement shall no longer be valid if modifications, changes or service and repair work is carried out by unauthorised persons or without the knowledge of the manufacturer. Invalidation of warranty entitlement shall also render the declaration of conformity invalid. The CE marking shall be declared invalid by the manufacturer.

We expressly point out that only spare parts and accessories or components approved by us may be used. The same applies likewise to installed units from our sub-suppliers.

©HBS Bolzenschweiss-Systeme GmbH & Co. KG

All rights reserved – Reprinting, in whole or in part, only with the approval of the manufacturer

8 Components of the Stud Welding Unit

The ACCU-TWIN is ideal for use on construction sites:

Preparation:

– Including the grinder for removing paint from heating elements

Charging:

– Two charging options: Power supply unit and car adaptor (charging cable for 12 V connection)

Everything close to hand:

– Transparent small parts box for accessories in your toolbag*)

*) Tools and welding elements not included in the scope of supply

Quick working:

– Magnetic storage compartment for quick access to welding elements

All rights reserved – Reprinting, in whole or in part, only with the approval of the manufacturer

8.1 Main Assemblies

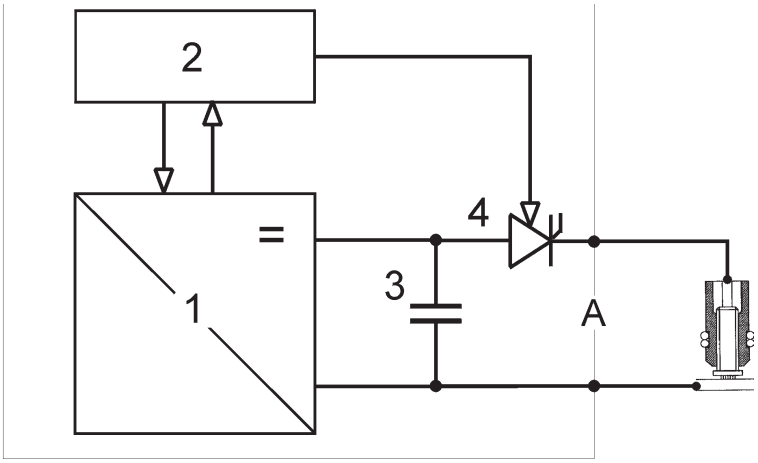

1- Charging unit

2 - Control

3 - Welding capacitors

4 - Welding thyristor

A - Welding circuit

Via the **charging unit (1)** the **welding capacitors (3)** are loaded to the set voltage. The capacitors store the energy which is required for the welding process.

The **electronic switch (4)** releases the charging voltage in the right time.

The charging process as well as the welding process are controlled by the **control unit (2)**.

The positive pole of the capacitoris is connected via the thyristor with one side of the welding gun. The negative pole is connected to the other side of the welding gun.

The type plate is located on the backside of the stud welding unit.

©HBS Bolzenschweiss-Systeme GmbH & Co. KG

All rights reserved – Reprinting, in whole or in part, only with the approval of the manufacturer

Type plate

The type plate contains the following information:

- Manufacturer
- Type
- Order No./Serial No.
- Primary voltage
- Fuse
- Power consumption
- Cooling class
- IP code
- Date

All rights reserved – Reprinting, in whole or in part, only with the approval of the manufacturer

8.2 Control Panel and Display

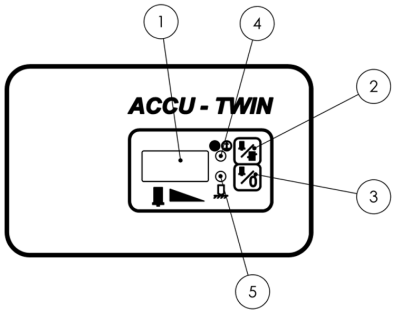

1 - Display

2 - Stud counter

3 - Reset stud counter

4 - Stand-by display

green	- READY
red	- CHARGING

5 - Status indication

red	- FAULT
yellow	- CONTACT

The status of the stud welding unit is monitored after activation. The current version number of the software is displayed. The following variables are then captured:

– battery status,

– thyristor defect,

– charging time of capacitors.

After the self-test the number of welds that are still possible will be shown in the **Display (1)**.

The stud welding unit is equipped with a stud counter. On actuation of the key „**Stud counter**“ **(2)** the number of welded studs appears in the **Display (1)**.

By simultaneously pressing the two keys „**Stud counter**“ **(2)** and „**Reset stud counter**“ **(3)** the stud counter is reset to zero.

©HBS Bolzenschweiss-Systeme GmbH & Co. KG

All rights reserved – Reprinting, in whole or in part, only with the approval of the manufacturer

8.3 LED Display

Indicator lights on the display

●	Green	The stud welding unit is ready for welding.
	Red flashing	The capacitor battery is charged.
	Red	The stud welding unit is locked – if battery is defective – if thyristor is defective – in the case of a charging malfunction (exceeding the charging period)
	Yellow	if there is electrical contact between both chucks

Indicator light under the switch

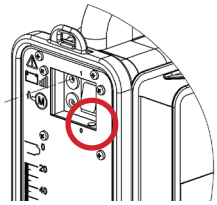

Red	A charging cable is connected. The battery is charged (if necessary).

8.4 Grinder

The supplied grinder consists of a solid casing made from glass fibre-reinforced polyamide with a soft component for the gripping area.

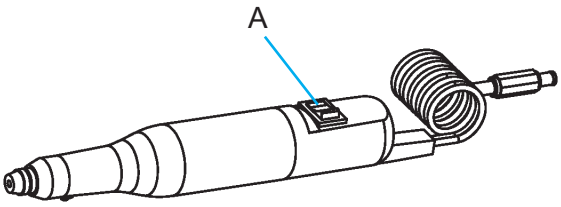

The grinder is switched on at the toggle switch (A).

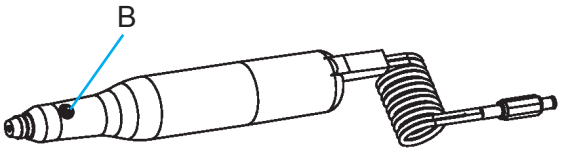

If necessary, the grinding cap can be changed using the lock (B).

All rights reserved – Reprinting, in whole or in part, only with the approval of the manufacturer

9 Welding Process

Stud welding with tip ignition is divided into contact stud welding and gap stud welding. This stud welding unit must be used exclusively for stud welding with contact.

9.1 Contact Stud Welding

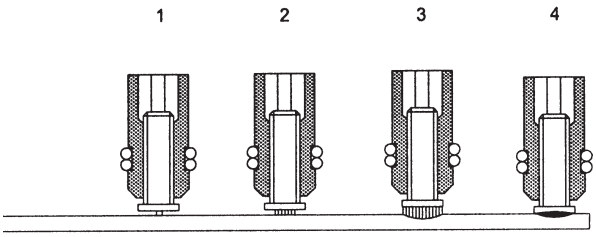

- The welding gun is placed onto the workpiece (see figure, **position 1**). The welding element which projects above the welding gun support legs, is pushed back tensioning a pressure spring.
- After positioning the welding gun against the workpiece, the operator triggers the welding gun button and starts the welding process; thus the current circuit is closed.
- The capacitors of the stud welding unit are discharged. Because of the high discharge current, the ignition tip evaporates explosion-like. The air gap between welding element and workpiece is ionized (see figure, **position 2**), an arc is produced.
- The light arc melts the face of the welding element together with an area of the workpiece of about the same dimension (see figure, **position 3**).
- Caused by the pressure spring, the welding element moves to the workpiece with a speed of 0,5 to 1 m/s. The adjusted spring force controls the plunging speed of the welding element.
- Higher plunging speed leads to shortened arc time and consequently to lower welding energy with identical voltage setting.
- The arc is cut as soon as the welding element touches the workpiece.
- Now the capacitors are short-circuited and the rest of the energy drains off (see figure, **position 4**).
- The pressure spring continues to push the welding element into the weld pool.

©HBS Bolzenschweiss-Systeme GmbH & Co. KG
All rights reserved – Reprinting, in whole or in part, only with the approval of the manufacturer

- The weld pool solidifies and the welding element is physically connected to the workpiece.
- The time period between ignition of the arc and solidification of the weld pool is about 3 ms.
- The use of contact welding for rapidly oxidizing materials like aluminium and aluminium alloys is not recommended because the arcing period with contact welding is longer than with gap stud welding.

All rights reserved – Reprinting, in whole or in part, only with the approval of the manufacturer

10 Preparing Place of Work and Welding Process

Danger from fumes and airborne particulates

- Switch on the welding fume extractor at the place of work.
- Ensure that the room is well ventilated.
- Never weld in rooms with a ceiling height of less than 2 m.
- Observe furthermore your working instructions and the accident prevention regulations.

This will help to avoid health damage due to fumes and airborne particulates.

Danger from fire and explosion

- Remove all inflammable materials and liquids from your working area.
- Ensure that there are no explosive materials in your working area.
- Ensure that an approved fire extinguisher is available at the place of work.

Danger from tripping and falling

- Lay cables and connecting leads in such a way that they are protected against damage and
- that you or third parties cannot trip over them or fall.

Warning of weld spatter

- Ensure that there is no equipment or apparatus in the working area that could be damaged by weld spatter.
- Remove if necessary.

©HBS Bolzenschweiss-Systeme GmbH & Co. KG

All rights reserved – Reprinting, in whole or in part, only with the approval of the manufacturer

Warning of electromagnetic fields

- Ensure that there is no equipment or apparatus in the working area that could be damaged by magnetic fields.
- Remove if necessary.

Danger!

- Ensure that there is a free circulation of air through the housing of the stud welding unit.
- Always place the stud welding unit on a stable, level and clean surface.
- Check the condition of all cables and cable connections.
- Have defective cables or their connections immediately repaired or replaced by a qualified electrician.

10.1 Preparing Surfaces

- Remove

– Paint, oil and other impurities,

– Rust,

– Non-conductive coatings (of surface-coated materials)

from the welding surface.

This ensures a high strength of the welded joints.

- **Weld the welding element only to a flat surface.**
- Ask your application consultant at HBS about welded joints on tubes and riffle plates (*see page 2*).

All rights reserved – Reprinting, in whole or in part, only with the approval of the manufacturer

Surface cleaning with the grinder

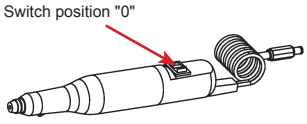

- Check that the grinder is switched off.
- Check that the stud welding unit is switched off.

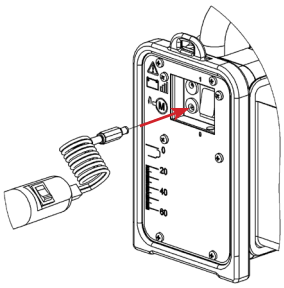

- Plug the grinder into the lower bush of the stud welding unit.

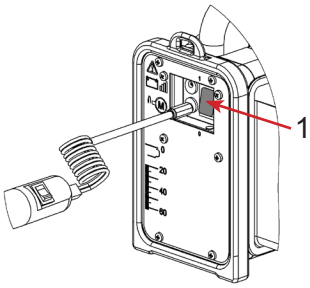

- Switch on the stud welding unit at the switch (1).

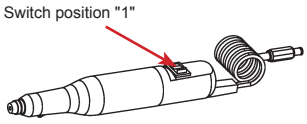

- Switch the grinder on.

Danger from fine dust

- Wear safety goggles and a fine-dust mask for all grinding work.

- Once work has finished, switch the grinder and stud welding unit off again.
- Unplug the grinder from the stud welding unit.

©HBS Bolzenschweiss-Systeme GmbH & Co. KG
All rights reserved – Reprinting, in whole or in part, only with the approval of the manufacturer

10.2 Adjusting and Inspecting the Welding Gun

The spacing of the two chucks can be varied. To this end, the lower chuck may be repositioned. As an aid you will find a measuring scale at the back of the stud welding unit.

- For this purpose, remove the spark-protection from the two chucks.
- Release the lower clamping nut with a 13 mm socket wrench.

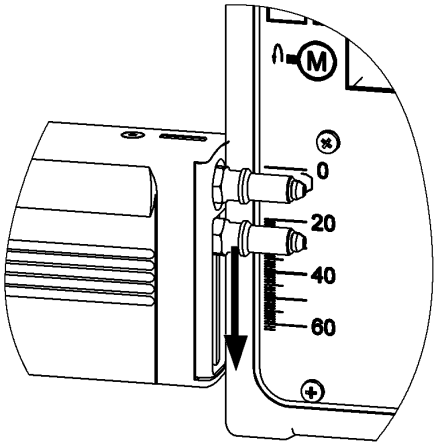

- Adjust the spacing of the chucks in accordance with the welding job *(see figure)*.

- Adjust the clamping nut by hand.
- Now tighten the clamping nut again with the 13 mm socket wrench.
- Check the chucks on your welding gun for proper seat:

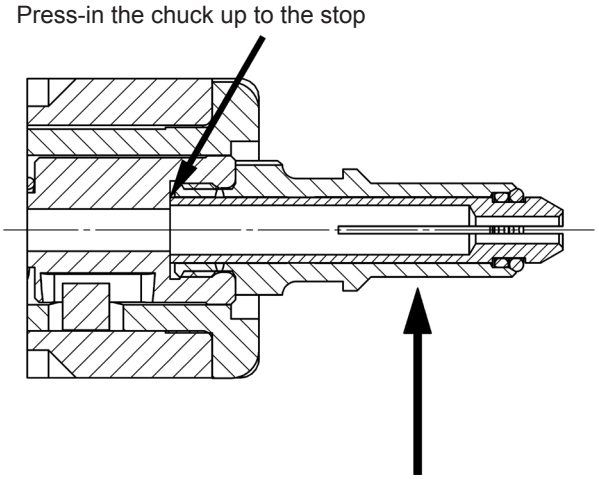

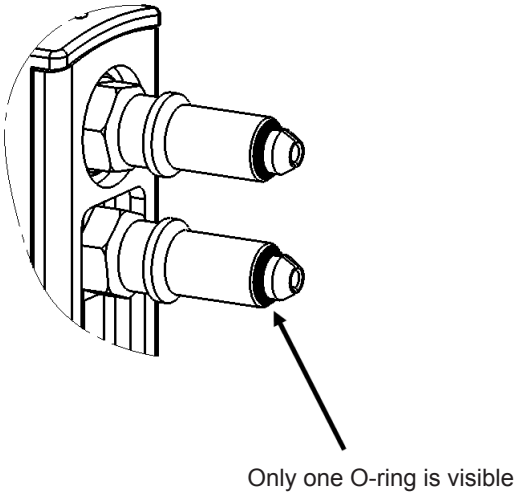

- Reattach the spark-protection to the two chucks.
- Make sure that the spark-protection on your welding gun is checked for damage and proper seat.

All rights reserved – Reprinting, in whole or in part, only with the approval of the manufacturer

11 Connection

First prepare your workplace.

- Read and observe here p*oint 10 „Preparing Workplace and Welding Process“*.

Connect the stud welding machine (external power supply unit or car adaptor) to the mains supply

Electric shock hazard

- Have an electrician check whether the plug socket to which you intended to connect the external power supply unit is correctly earthed.
- Connect the external power supply unit only to a mains supply with the same mains voltage as that indicated on the type plate.
- Compare the current consumption indicated on the type plate with the fuse of your mains power supply.
- Check that the stud welding unit is switched off.

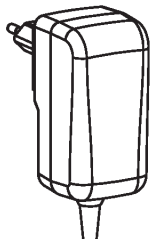

- Only now insert the plug into the plug socket.
- If necessary, use an adaptor.

Charging of the accumulator upon using for the first time

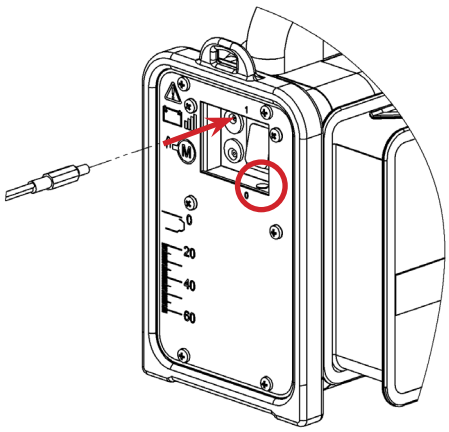

- **Charge the accumulator before using for the first time.**
- Plug the external power supply unit or the car charging cable into the upper bush of the stud welding machine.

The stud welding machine must not be switched on.

The “*Charging cable connected*” LED lights up red below the switch.

Charging time: max. 10 hours

©HBS Bolzenschweiss-Systeme GmbH & Co. KG
All rights reserved – Reprinting, in whole or in part, only with the approval of the manufacturer

12 Welding

- **Charge the accumulator before using for the first time.**
- Read and observe here *point 11 „Connection“*.

Life-threatening danger for wearers of active implanted cardiac devices

Danger for workers at particular risk within the meaning of the EMF directive

Persons at particular risk within the meaning of the EMF directive are:

– Workers with active implanted medical devices
– Workers with passive implanted medical devices that contain metal
– Workers with medical devices worn on the body
– Pregnant workers.

- Never operate the stud welding machine if you are among the group of workers at particular risk within the meaning of the EMF directive.
- In this case, never remain in the vicinity of the stud welding machine during welding.
- Never operate the stud welding machine if persons are located nearby who are among the group of workers at particular risk within the meaning of the EMF directive.

Strong electromagnetic fields are produced in the vicinity of the stud welding machine during welding. These fields can adversely affect the function of medical devices as well as the course of a pregnancy.

All rights reserved – Reprinting, in whole or in part, only with the approval of the manufacturer

12.1 Switching on the Stud Welding Unit

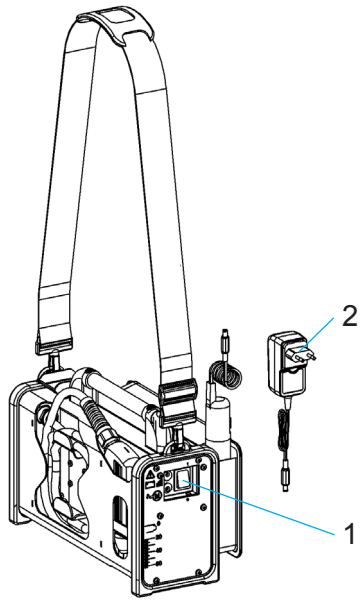

1 - Switch

2 - External power supply unit

◆ Only now switch on the stud welding unit at the **mains switch (1)** at the back of the stud welding unit.

◆ Wait until the green welding stand-by indicator lights up.

◆ **Charge the accumulator before using for the first time!**

12.2 Performing the Welding Process

Electric shock and light arc hazard

◆ Never touch the welding elements, chuck, retaining nut or electrically conductive parts in their vicinity during the welding process.

These parts are live.

◆ Never wear metal jewellery, even a wristwatch, on your body during the welding process.

This will help to avoid injuries and damage due to electric power or electromagnetic fields.

Electric shock and light arc hazard

◆ Stand on an insulated mat if you have to weld under the following conditions:

– In confined spaces with electrically conductive walls

– Under cramped conditions between or against electrically conductive parts

– Where there is limited mobility on electrically conductive parts

– In damp, wet or hot rooms.

©HBS Bolzenschweiss-Systeme GmbH & Co. KG

All rights reserved – Reprinting, in whole or in part, only with the approval of the manufacturer

Danger of deflagration of explosive gases and substances

- Never weld in rooms with an explosion hazard.
- Never weld on vessels containing or that have contained substances
  - which are inflammable or promote combustion,
  - which may create health-endangering gases, fumes or airborne particulates,
  - or which could cause explosions.

Such work may only be carried out by welding specialists.

Do not carry out such work if you have not been specially trained for it.

Risk of fire and burns due to glowing weld spatter

- Wear your personal protective equipment and
- your safety goggles with sight glass of protection class 2.
- Wear a protective helmet when welding over head.
- Remove all inflammable materials and liquids from the vicinity of the place of work before starting welding.
- Ensure that an approved fire extinguisher is available at the place of work.
- Observe furthermore your working instructions and the accident prevention regulations.

Glowing hot weld and liquid spatter occur during welding.

All rights reserved – Reprinting, in whole or in part, only with the approval of the manufacturer

Danger due to noise

- Wear your ear protectors during welding.
- Observe furthermore your working instructions and the accident prevention regulations.
- Inform colleagues working in the immediate vicinity accordingly before starting work.

A > 90 dB (A) bang can occur during the welding process.

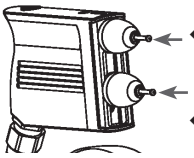

- Check whether the welding elements have been inserted into the welding gun.
- Insert welding elements, if necessary.

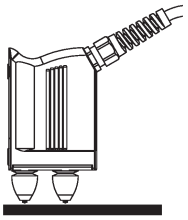

- Place the welding gun perpendicularly onto the workpiece as soon as the stud welding unit is ready for the welding process.
- Press the welding gun firmly with both hands against the workpiece until the welding gun attachment (spacer) is resting uniformly on the workpiece.

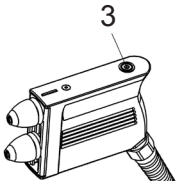

- Hold the welding gun firmly, steady and straight.
- For exact positioning of the welding gun use the built-in bubble level (3).
- Ensure that you do not touch any metal parts of the welding gun.

Welding process follows automatically after 0.5 s, if

- LED (Ready for welding) shows green,
- welding gun is pressed to radiator,
- both welding elements are in metallic contact.

- **Always pull the welding gun perpendicularly away from the welding element after the welding process**.

If you pull the welding gun away at an angle, you will strain the chuck and shorten its service life.

Risk of burns

The gun head becomes very hot during the welding process. The same applies to the welded element and the workpiece.

- Wear your personal protective equipment.

©HBS Bolzenschweiss-Systeme GmbH & Co. KG

All rights reserved – Reprinting, in whole or in part, only with the approval of the manufacturer

◆ **Immediately recharge the accumulators after use.**

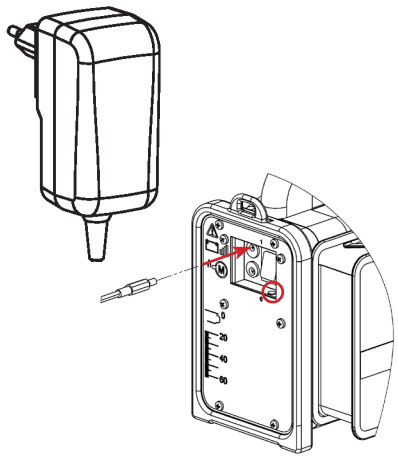

The accumulator will be damaged if stored in uncharged condition.

A loaded accumulator will discharge itself at 5 % per month.

◆ For recharging the accumulators connect the external power supply unit.

The stud welding machine must not be switched on.

The "*Charging cable connected*" LED lights up red below the switch.

If the stud welding unit is switched on, after approx. 30 minutes the sleep mode is started; the internal energy consumption is reduced. After approx. 60 minutes the stud welding unit will be switched off.

◆ After automatic switch-off, switch off the stud welding unit with the switch. The accumulators continue to be charged, however.

☞

◆ **Use only welding elements of one batch.**

◆ Pay strict attention not to mix welding elements from different batches.

◆ Carry out test welds again after a batch change.

Even the slightest changes to the geometry, in particular to the tip of the welding elements require different settings for the welding process.

☞

◆ Now check the quality of the welded joint before inserting a new welding element and repeating the welding process.

◆ Work in accordance with *point 13*.

All rights reserved – Reprinting, in whole or in part, only with the approval of the manufacturer

12.3 Additional Information ACCU-TWIN

The welding gun triggers automatically as soon as it is firmly pressed onto the surface and both welding elements are in metallic contact.

The stud welding unit automatically switches to **stand-by mode after approximately 30 minutes** if no weld is carried out. The energy consumption of the stud welding unit is reduced. The stud welding unit automatically switches on again as soon as the welding gun is pressed firmly on the work piece and both welding elements have made metallic contact.

☞ **After approx. 60 minutes without welding the stud welding unit will be switched off.** The stud welding unit must be switched on again by actuating the switch on the back of the stud welding unit.

From safety reasons, charging the capacitors is carried out exclusively after withdrawal of the welding gun from the welded welding elements.

If you want to weld only one welding element, insert a welding element, put the welding gun with the second holder on an already welded welding element or insert a welding element without ignition tip into the chuck. The further process sequence is according to standard welding.

☞ **Before you weld aluminium materials, you must successfully carry out trial welds** due to significantly different aluminium alloys.

The positive and negative lines which are incorporated in a cable cause only a very low degree of inductivities in the welding current circuit. This generates only low electromagnetic interference during welding. Devices in the neighborhood are not negatively affected or damaged.

☞ **Welding operations are only possible with accumulator.**

In case of defective accumulators, operation of the stud welding unit is not possible.

©HBS Bolzenschweiss-Systeme GmbH & Co. KG

All rights reserved – Reprinting, in whole or in part, only with the approval of the manufacturer

How to charge the accumulator?

1. Display shows less than 50 welds possible

◆ Connect the stud welding unit to the external power supply unit and to the primary power supply.

☞ **We recommend that the accumulator should be recharged after prolonged pauses or at the end of work.**

Overcharge

As soon as the charging process is completed, the stud welding unit automatically switches over to trickle charge – overcharging is impossible.

General

Taking the above mentioned items into account, your accumulator can reach up to 200 charging cycles.

With increased age, the charging capacity of the accumulator decreases, i.e. the accumulator is very quick recharged and on the other hand discharged after only a few welds.

The decrease of charging capacity is absolutely normal as some of the chemical processes in lead-gel accumulators are only reversible for a certain period of time.

We are providing you with accumulators which are maintenance-free, gas-tight and checked to VdS. We have selected this type of accumulators due to its superior energy density. Used under normal conditions, electrolyte cannot escape. In this way, one can work in each working position.

Guarantee

We do not grant any guarantee on accumulators as we have no influence on proper and appropriate operation. We apologise for any inconvenience.

All rights reserved – Reprinting, in whole or in part, only with the approval of the manufacturer

13 Checking the Quality of the Weld

You can check the quality of the weld by means of a visual inspection and a bending test.

The number and type or method of the tests to be performed and the acceptance criteria are defined in respective standards for quality demands.

13.1 Carrying out Visual Inspection

◆ Carry out a visual inspection on all welding elements.

Visual Inspection			
Condition		Possible cause	Corrective actions
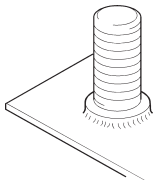	Good welded joint Low spatters around the weld without outer flaws The weld pool forms a collar around the flange of about 1 - 1.5 mm	Correct parameters	none

©HBS Bolzenschweiss-Systeme GmbH & Co. KG
All rights reserved – Reprinting, in whole or in part, only with the approval of the manufacturer

13.2 Carrying out Bending Test

You can purchase from HBS a bending device with inserts for various diameters of the welding elements.

The bending test serves as an easy work sample and as a check for the selected welding parameters. The welded joint is stressed by bending in a non-defined way.

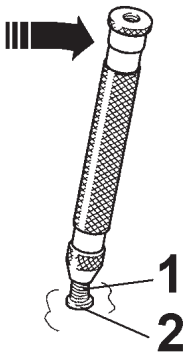

1 - Welding element

2 - Welded joint

◆ Place the bending device on the **welding element (1)** and

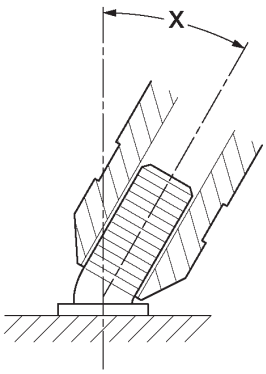

◆ bend the **welding element (1)** with the bending device once by 30° in any direction.

The bending test is passed if a crack or a fracture of the welded zone does not occur.

☞

◆ **Further tests should be conducted if the connection fails in the weld area.**

◆ In this case, **bend** the welding element exactly in the opposite direction by 30° towards the failing seam.

All rights reserved – Reprinting, in whole or in part, only with the approval of the manufacturer

☞

◆ You don’t need to test all studs.

It is sufficient to carry out stud tests on several production samples that are picked at random.

Bending Test			
Type of fracture		Possible cause	Corrective actions
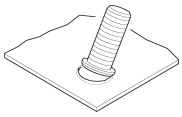	Base material buckling	Correct parameters	none
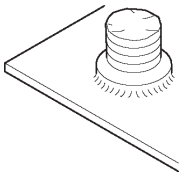	Fracture in welding element above flange	Correct parameters	none

If the strength of the joint is inadequate, then:

◆ check whether the surface of welding element and base material are clean and electrically conductive.

They must be free from scale, oil, paint, oxide layers.

◆ Grind off hardened workpiece surfaces (e.g. roll hardening).

◆ Check the piston of the welding gun for ease of movement.

©HBS Bolzenschweiss-Systeme GmbH & Co. KG

All rights reserved – Reprinting, in whole or in part, only with the approval of the manufacturer

13.3 Blowing Effect and Remedies

With asymmetric ground connections, different material distributions or when welding at the edge of a workpiece a "blowing effect" can occur. This is an undesirable deflection of the light arc. This results in uneven melting of the stud material, in increased poring and undercuts in the welding area.

The blowing effect is proportional to the current amperage and can be influenced by symmetrical connection of the ground terminals, by connecting compensating grounds or (on welding guns with external welding cable) by turning the welding gun about its vertical axis.

Blowing effect	
Cause	Remedy
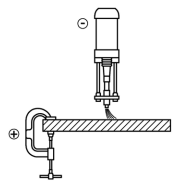	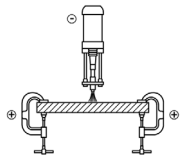
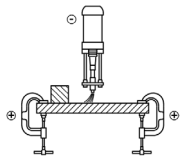	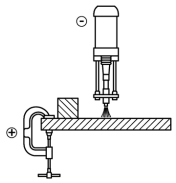
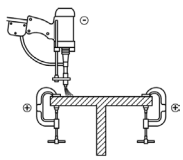	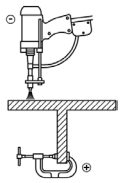

All rights reserved – Reprinting, in whole or in part, only with the approval of the manufacturer

14 Troubleshooting

Danger from insufficiently qualified operating personnel

- Carry out only the work described here on your stud welding unit or stud welding gun.
- Repairs may only be carried out by appropriately qualified personnel.
- Inform your dealer or your maintenance department.

Fault	Possible cause	Fault localisation	Fault remedy	Performance
Welding elements not firmly attached	Plunging speed of welding element too low	Check welding piston for ease of movement *)	Clean or replace the welding piston*)	Qualified specialists
Weld splatters on workpiece	Spark-protection is defective	Inspect spark-protection for possible defects	Replace spark-protection	Trained personnel
Welding gun does not weld	Connecting line is defective	Check connecting line for electrical continuity*)	No electrical continuity: replace connecting line*)	Qualified specialists
Stud welding unit cannot be switched on	Accumulator voltage too low	Measure accumulator voltage	Replace accumulator	Trained personnel
Accumulator is not charged	External power supply unit defective	Examine external power supply unit	Replace external stud welding unit	Trained personnel
Accumulator is not charged **or** stud welding unit does not switch to STAND-BY **or** welding gun does not weld	P.C. board is defective	Examine P.C. board*)	Replace P.C. board*)	Qualified specialists
	Damage due to falling	Examine stud welding unit for external damage	In the event of severe damage, return entire stud welding unit	HBS Service
Permanent red display: E1	Accumulator is discharged	Charge the accumulator	When error message is still displayed after loading, then accumulator is defective	Trained personnel
	Accumulator defective	Examine accumulator	Replace accumulator	Trained personnel
Permanent red display: E2	Thyristor defective	Examine thyristor*)	Replace thyristor*)	Qualified specialists
Permanent red display: E3	Charging error (charging time of capacitors exceeded)	Examine capacitors*)	Replace capacitors*)	Qualified specialists

Work marked with *) may only be carried out by qualified electricians!

- Please contact our Service department if none of the measures described remedies the situation.
- Please use the form „Service & Support“ in the annex to send in the stud welding unit.

©HBS Bolzenschweiss-Systeme GmbH & Co. KG
All rights reserved – Reprinting, in whole or in part, only with the approval of the manufacturer

15 Shutting Down

- Switch off the stud welding unit.
- Protect the stud welding unit and its components against the ingress of liquids and foreign matter.

All rights reserved – Reprinting, in whole or in part, only with the approval of the manufacturer

16 Maintenance and Care

Electric shock hazard

- Always switch off the stud welding unit before starting maintenance and care work.
- Pull out the mains plug.

Danger from insufficiently qualified operating personnel

- Carry out only the work described here on your stud welding unit.
- Repairs may only be carried out by appropriately qualified personnel.
- Inform your dealer or your maintenance department.

16.1 Cleaning

- Clean the surface of the stud welding unit with a slightly damp cloth, when necessary.
- Add a little household detergent to the cleaning water.

- **Do not use solvents for cleaning.**

These can damage the surface of your stud welding unit.

Maintenance of Accumulators

Storage in discharged condition destroys the accumulator within short!

When should the accumulator be charged?

- Charge the accumulator immediately after use.

  Charging period is approximately 10 hours.
- Charge the accumulator as soon as the display is under 50 possible welds. In this way you put your accumulator in best condition to reach the optimum number of charging cycles and/or life expectancy.

©HBS Bolzenschweiss-Systeme GmbH & Co. KG

All rights reserved – Reprinting, in whole or in part, only with the approval of the manufacturer

- If possible, avoid a discharge of the accumulator to the extent that the display indicates less than 50 possible welds, as this condition considerably reduces the life expectancy of the accumulator.

  Immediate charging required!

In the case of a total discharge, a continued welding using the accumulator is blocked.

- Is the accumulator not used, charge the stored battery periodically all 6 months as it will discharge itself at approximately 5 % per month.

Maintenance Instructions for Chucks

- After the welding process has been completed, withdraw the welding gun straight back from the welding element.

If you remove the welding gun at an angle, the chuck will be stretched (welding elements can be inserted almost without any catch), this will considerably reduce its life expectancy.

- In the case the welding elements can be inserted into the chucks almost without any catch, the studs must be pretensioned with flat pliers.

Pretensioning the chucks is recommended on a regular base.

- Short welding elements < 10 mm cause an increased burn-off and reduced life expectancy of the chucks.

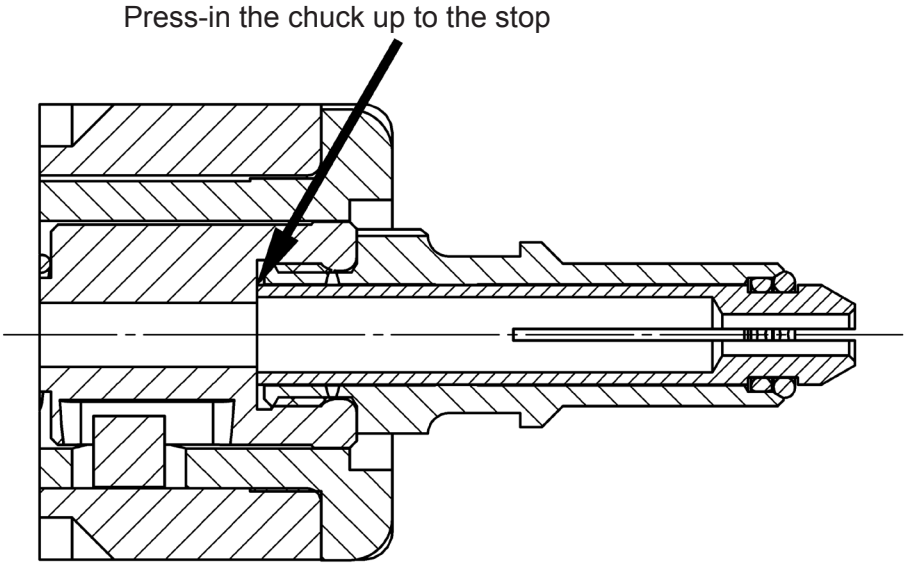

All rights reserved – Reprinting, in whole or in part, only with the approval of the manufacturer

16.2 Inspection and Tests

- **Inspect the condition of the connecting cable between external power supply unit and stud welding unit.**
- Inform your dealer or maintenance department if you discover any damage.

- Check whether the readings on the display of the stud welding unit are still legible before starting work.
- Clean display and control panel in the event of soiling.

- Replace any removed or damaged signs:

Observe the operating manual

©HBS Bolzenschweiss-Systeme GmbH & Co. KG
All rights reserved – Reprinting, in whole or in part, only with the approval of the manufacturer

16.3 Replacing the Accumulator

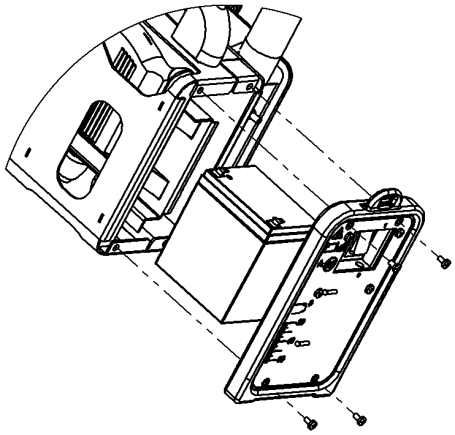

- Loosen the four screws on the rear wall.
- Remove the rear wall.
- Carefully remove the accumulator from the casing.
- Remove the connections from the accumulator.
- Replace the accumulator.
- Reconnect the connections.

Caution! Pay attention to polarity!

red = plus

blue = minus

- Reassemble the stud welding unit in the reverse order.

All rights reserved – Reprinting, in whole or in part, only with the approval of the manufacturer

17 Storage

- Store the stud welding unit in a safe and dust-free location when not in use.
- Protect the stud welding unit from moisture and metallic contamination.

- Store the stud welding unit only under the following ambient conditions.

Storage temperature:

-5 °C to +50 °C

Relative humidity:

0 % - 50 % at +40 °C
0 % - 90 % at +20 °C

18 Disposal

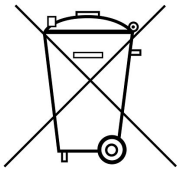

- Dispose of the stud welding unit only via the manufacturer or a specialist disposal company.
- Never dispose of the stud welding unit in the domestic refuse.

©HBS Bolzenschweiss-Systeme GmbH & Co. KG
All rights reserved – Reprinting, in whole or in part, only with the approval of the manufacturer

EC Declaration of Conformity

in Accordance with Directive 2006/42/EC, Annex II 1 A
(Original EC Declaration of Conformity)

Herewith the manufacturer

HBS Bolzenschweiss-Systeme GmbH & Co. KG
Felix-Wankel-Strasse 18
P.O. Box 13 46
85221 Dachau
GERMANY

Phone +49 8131 511-0
Fax +49 8131 511-100

declares for the following product

Machine information: Stud welding unit
Type: ACCU-TWIN
Order No: 92-10-2380A
Serial-No: 92-10-2380A/211XXXX
Year of manufacture: 2021

in conjunction with HBS components as complete system

that the machinery fulfils all the relevant provisions to this Directive, including changes to the Directive to be applied at the moment of this declaration.

The product is conform with following further EU Directives, including changes to the Directives to be applied at the moment of this declaration:

„Low voltage guideline“ 2014/35/EU
„EMC guideline“ 2014/30/EU
„Directive on the restriction of the use of certain hazardous substances in electrical and electronic equipment“ 2011/65/EU

Following harmonised standards (or parts thereof) were applied:

DIN EN 60974-1	Arc welding equipment - Part 1: Welding power sources
DIN EN 60974-10	Arc welding equipment - Part 10: Product standard for arc welding equipment
DIN EN 60204-1	Safety of machinery - Electrical equipment of machines; Part 1: General requirements

The following national standards and other specifications (or parts thereof) were applied:

VDE 0544-1

Persons who are based in the European community and who are authorised to compile the technical documentation:

Name: Heike Otto Address: see manufacturer

Dachau, 04.01.2021
Place of issue, Date

Gregor Gröger (CEO HBS)

All rights reserved – Reprinting, in whole or in part, only with the approval of the manufacturer

Service & Support

With the return please attach a copy of the filled out form together with the repair number given by HBS! Repairs without repair number will not be processed.

Repair number
(given by HBS)

_____

Company: _____
Name / Surname: _____
Street: _____
City, State and ZIP/Postcode: _____
Country: _____
Phone & Fax: _____
E-mail address: _____

Stud welding unit / stud welding gun type of model: _____
Serial number: _____
Date of purchase: _____
Purchased at distributor: _____

Detailed descriptions of errors: _____

Service & Support may be done up to the value of EUR _____ without quotation: ☐ Yes ☐ No

Could you find any damage / burn marks

on the cables: ☐ Yes ☐ No

on chucks: ☐ Yes ☐ No

Are all plug and screw connections tightly fastened *: ☐ Yes ☐ No

Are there any burn marks on plug or screw connections: ☐ Yes ☐ No

Is there any other visual damage (e.g. cracks, dents): ☐ Yes ☐ No

Have you checked the fuses: ☐ Yes ☐ No

Default on the display of the stud welding unit:

ARC / IT					CD / CDM / SC					
○	⊗				●		⊗			**

Which LED´s are illuminated (please mark with a cross)?

Please e-mail or fax this form to service@hbs-info.de or fax: +49 8131 511-100.
In case a repair is necessary a repair number will be given!

* See also operating manual chapter „Connection“
** Doesn´t light when using a contact welding gun

©HBS Bolzenschweiss-Systeme GmbH & Co. KG
All rights reserved – Reprinting, in whole or in part, only with the approval of the manufacturer

Index

A
accessories 14
airborne particulates 7, 26
automatic welding head. 12

B
bang. 8, 34
basic configuration. 13
batch 35
bending device 39
bending test. 39
blowing effect. 41

C
capacitor 12, 24
charging unit 20
checking the quality. 38
chuck, spacing. 29
cleaning 44
clothing, non-flammable 8
contact stud welding 24
control 20

D
danger from incorrect use 6
disposal 48

E
ear protection. 10
electrical hazards. 10
electric arc 12
electromagnetic fields 10
EMF directive, safety notices. 9

F
fire extinguisher 8, 33
fire extinguisher, approved 26
fire hazard 8
form „Service & Support“. 42, 50
full-ear hearing protection 8
fumes, harmful to health 7, 26
fuse 30

G
gap stud welding 25
glossary 12
grinder 23

H
hazards for the machine 10
hazards for the operator 10
heart pacemaker 7, 10, 31
helmet 8

I
ignition tip 24
intended use 17, 26

L
LED display 23
light arc 24
liquids, inflammable. 26

M
main assemblies 20
mains power supply. 30
mains switch 32
mains voltage 30
maintenance, accumulators. 44
maintenance and care. 44
maintenance instructions, chuck 45
materials, inflammable. 26
measuring scale 29

O
operating manual. 13
oxidizing materials. 25

P
plunging speed 24
protective apron. 8
protective equipment. 8
protective equipment, personal 10
protective gloves 8

R
rectifier. 12
risk of burns. 33
risk of falling. 26
risk of fire. 33
risk of tripping 26

S
safety goggles 10
safety goggles with sight glass 8
safety precautions 6

All rights reserved – Reprinting, in whole or in part, only with the approval of the manufacturer

scope of supply 13
shutting down 43
spacer 34
storage. 48
storage temperature 48
stud counter. 22
stud feeder. 12
stud welding gun 12
stud welding system 12
stud welding unit 12
substances, explosive 26
surface of base material 40
surface of welding element 40
switching on the stud welding unit. 32
symbols used. 10

T

troubleshooting 42
type plate. 21

V

vessels, welding work on. 33
visual inspection 38

W

warranty entitlement 18
welding capacitors. 20
welding element. 12
welding energy 24
welding gun attachment. 34
welding parameters 12
welding process. 24
welding thyristor. 20
workpiece 12

©HBS Bolzenschweiss-Systeme GmbH & Co. KG
All rights reserved – Reprinting, in whole or in part, only with the approval of the manufacturer

HBS Bolzenschweiss-Systeme GmbH & Co. KG
Felix-Wankel-Strasse 18 • 85221 DACHAU • GERMANY
Phone +49 8131 511-0 • Fax +49 8131 511-100 • E-mail international@hbs-info.com

www.hbs-info.com