A 22

Stud Welding Gun

93-20-290C

Operating Manual

2024

After-sales service for Germany:

HBS Bolzenschweiss-Systeme GmbH & Co. KG
Felix-Wankel-Strasse 18
85221 DACHAU
GERMANY

Phone	**+49 8131 511-0**
Fax	**+49 8131 511-100**
E-mail	**international@hbs-info.com**
Web	**www.hbs-info.com**

A 22 Operating Manual Issue 2024-01 Order No. E-BA 93-20-290C

Translation of the Original Operating Manual

Please keep the manual in a safe place for future reference.

Transmission and duplication of this document, dissemination and notification of the contents are not permitted unless expressly approved.

All rights, errors and technical amendments reserved.

© HBS Bolzenschweiss-Systeme GmbH & Co. KG

Dear Customer,

Many thanks for buying a stud welding machine from HBS Bolzenschweiss-Systeme.

We at HBS wish you success at all times when working with this stud welding machine.

The high level of quality of our products is guaranteed by ongoing further development in the design, equipment and accessories. This may result in differences between the present operating manual and your product. No claims can therefore be derived from the data, illustrations and descriptions.

We have compiled the data and information in this reference work with the greatest care, and have made every effort to ensure that the information contained in this manual was correct and up-to-date at the time of delivery. We can nevertheless give no guarantee for an absolutely error-free document.

Should you discover any errors or unclear points when reading this operating manual, please do not hesitate to contact us.

We would also be grateful for any feedback should you have any suggestions or complaints to make about our product.

HBS Bolzenschweiss-Systeme GmbH & Co. KG

Felix-Wankel-Strasse 18

85221 Dachau

GERMANY

All rights reserved – Reprinting, in whole or in part, only with the approval of the manufacturer

Table of Contents

1 Important Safety Precautions 6

2 Symbols and Terms Used 10

3 Scope of Supply 13

4 Accessories 13

5 Technical Data 14

6 Intended Use 17

7 Warranty 18

8 Design and Function 19

9 Welding Process 20

10 Preparing the Stud Welding Gun 21

10.1 Mounting the Chuck 23

10.2 Mounting the Leg Assembly 24

10.3 Setting the Welding Parameters 26

Adjusting Lift 28

Setting the Insertion Depth (Protrusion) 29

Adjusting the Hydraulic Damping 30

11 Welding 32

12 Troubleshooting 33

13 Maintenance and Care 35

13.1 Cleaning 35

13.2 Inspection and Tests 36

13.3 Adjusting the Lift Scale 37

©HBS Bolzenschweiss-Systeme GmbH & Co. KG

All rights reserved – Reprinting, in whole or in part, only with the approval of the manufacturer

14 Storage 38

15 Disposal 38

Declaration of Incorporation of partly completed Machinery 39

Service & Support 40

Index 41

All rights reserved – Reprinting, in whole or in part, only with the approval of the manufacturer

1 Important Safety Precautions

The target group for this manual are qualified personnel who in view of their technical training, know-how and experience and knowledge of applicable regulations are able to assess the work assigned to them and recognise potential hazards.

Danger from incorrect use

- Use the stud welding machine only for the purpose described in this manual.

Otherwise you may endanger yourself or damage the stud welding machine.

You endanger yourself and others if you operate the stud welding machine incorrectly or fail to observe the safety precautions and warnings. This can lead to serious injury or extensive material damage.

Danger for unauthorised operating personnel

- Work with the stud welding machine only when
  - You are appropriately trained, instructed and authorised to do so, and
  - You have read and completely understood this operating manual.
- Never work with the stud welding machine when you are under the influence of
  - Alcohol,
  - Drugs or
  - Medication.

Danger from unauthorised modifications

- Never modify the stud welding machine or parts thereof without obtaining a clearance certificate from the manufacturer.

You will otherwise endanger yourself. This can lead to serious injury or extensive material damage.

©HBS Bolzenschweiss-Systeme GmbH & Co. KG

All rights reserved – Reprinting, in whole or in part, only with the approval of the manufacturer

Life-threatening danger for wearers of active implanted cardiac devices

Danger for workers at particular risk within the meaning of the EMF directive

Persons at particular risk within the meaning of the EMF directive are:

– Workers with active implanted medical devices
– Workers with passive implanted medical devices that contain metal
– Workers with medical devices worn on the body
– Pregnant workers.

◆ Never operate the stud welding machine if you are among the group of workers at particular risk within the meaning of the EMF directive.
◆ In this case, never remain in the vicinity of the stud welding machine during welding.
◆ Never operate the stud welding machine if persons are located nearby who are among the group of workers at particular risk within the meaning of the EMF directive.

Strong electromagnetic fields are produced in the vicinity of the stud welding machine during welding. These fields can adversely affect the function of medical devices as well as the course of a pregnancy.

Danger from fumes and airborne particulates

◆ Switch on the welding fume extractor at the place of work.
◆ Ensure that the room is well ventilated.
◆ Never weld in rooms with a ceiling height of less than 3 m.
◆ Observe furthermore your working instructions and the accident prevention regulations.

This will help to avoid health damage due to fumes and airborne particulates.

All rights reserved – Reprinting, in whole or in part, only with the approval of the manufacturer

Danger from glowing metal spatter (fire hazard)

Glowing hot weld spatter and liquid splashes, flashes of light and a loud bang > 90 dB (A) must be anticipated during stud welding.

- Inform colleagues working in the immediate vicinity accordingly before starting work.
- Ensure that an approved fire extinguisher is available at the workplace.
- Do not weld when wearing working clothes soiled with flammable substances such as oil, grease, petroleum, etc.
- Wear your proper protective equipment, such as:
  - Protective gloves in accordance with the relevant standard,
  - Non-flammable clothing,
  - A protective apron over your clothing,
  - Full-ear hearing protection in accordance with the relevant standard,
  - A safety helmet when welding above your head,
  - Safety shoes,
  - Safety goggles with sight glass of protection level 2 in compliance with the applicable standards and do not look directly into the electric arc.
- Remove all flammable materials and liquids from the vicinity of the work area before starting welding.
- Weld at a safe distance from flammable materials or liquids. Select a safety distance large enough to ensure that no danger can arise from weld spatter.

Protection of the stud welding unit

- Protect the stud welding machine against the ingress of foreign matter and liquids caused by cutting or grinding work in the vicinity of your work area.

This will help to prolong the service life of your stud welding machine.

©HBS Bolzenschweiss-Systeme GmbH & Co. KG

All rights reserved – Reprinting, in whole or in part, only with the approval of the manufacturer

Safety notices in accordance with EMF directive 2013/35/EU

Currents flowing through electrical conductors during stud welding cause electric and magnetic fields that can occur, in particular, near the hand-held welding guns, the welding arrangement (e.g., welding cables) and the welding power sources.

Due to the high currents, high EMF exposures may occur.

Danger for workers at particular risk within the meaning of the EMF directive

Persons at particular risk within the meaning of the EMF directive are:

- Workers with active implanted medical devices
- Workers with passive implanted medical devices that contain metal
- Workers with medical devices worn on the body
- Pregnant workers.

Strong electromagnetic fields are produced in the vicinity of the stud welding machine during welding.

To reduce the danger posed by electromagnetic fields, we recommend, among other things, the following rules of conduct:

◆ Lay all cables as close together as possible.

For proper bundling and safeguarding of the cables, HBS offers protective tubes in various sizes.

◆ Do not position yourself between the welding cables.

◆ Only lay the cables to one side and position them as far as possible from the operating personnel.

◆ Do not loop the cables over your body, especially not at head level.

◆ Completely unwind the welding cables.

◆ Use the shortest possible welding cables.

◆ Place portable welding power sources as far away as possible while welding.

◆ If possible, do not operate welding power sources in the immediate vicinity of other persons, do not sit directly next to the welding power source while working and do not lean against it.

◆ In addition to these safety notices, also observe your work instructions and accident prevention regulations.

All rights reserved – Reprinting, in whole or in part, only with the approval of the manufacturer

2 Symbols and Terms Used

The symbols used in this operating manual have the following meanings:

Danger

Warns you of hazards that can lead to **injury of persons** or to **considerable material damage.**

Caution

Problems in operating **may occur** if this information **is not observed.**

No access for people with active implanted cardiac devices

No access for persons with implants made of metal

No access for pregnant women

Danger

Warns you of **electrical** hazards

Danger

Warns you of **electromagnetic fields** that can be generated during welding

These symbols prompt you to wear **personal protective equipment when working with the stud welding unit**.

This symbol prompts you to wear **ear protection**. **A loud bang > 90 dB (A) can occur during the welding process.**

©HBS Bolzenschweiss-Systeme GmbH & Co. KG

All rights reserved – Reprinting, in whole or in part, only with the approval of the manufacturer

☞ **Tip**

Cross-reference to **useful information** on the use of the stud welding machine

Cross-references in this operating manual are marked with this symbol or ***are printed in italics***

Fire hazard

Have a suitable fire extinguisher for the working area ready before starting work.

◆ **Work instruction**

– **List**

©HBS Bolzenschweiss-Systeme GmbH & Co. KG

All rights reserved – Reprinting, in whole or in part, only with the approval of the manufacturer

Glossary

Automatic welding head:	Device for welding of welding elements
Capacitor:	Component for storage of electrical energy.
Electric arc:	Autonomous gas discharge between two electrodes when the current is high enough. A whitish light is emitted in the process. The electric arc allows very high temperatures to be generated.
Rectifier:	Electrical component that converts alternating voltage into direct voltage
Stud feeder:	Device for automatic feeding of welding elements
Stud welding gun:	Device for welding of welding elements
Stud welding system:	Stud welding unit including stud welding gun or welding head
Stud welding unit:	Device for provision of the electrical energy for stud welding
Thyristor:	Electronic component for contact-free switching of high currents; switching takes place via the control input
Welding element:	Component such as stud or pin that is welded to the workpiece
Welding parameters:	Mechanical and electrical settings at the stud welding gun or welding head and at the stud welding unit (e.g. spring force, charging voltage)
Workpiece:	Components such as sheet metal or tubes to which the welding elements are to be fastened

©HBS Bolzenschweiss-Systeme GmbH & Co. KG

All rights reserved – Reprinting, in whole or in part, only with the approval of the manufacturer

3 Scope of Supply

The **basic configuration** of your welding gun contains the following parts:

No. of pieces	Part	Type	Order No.
1	Welding gun cable length 4.85 m	A 22	93-20-290C
1	Operating manual	A 22	E-BA 93-20-290C

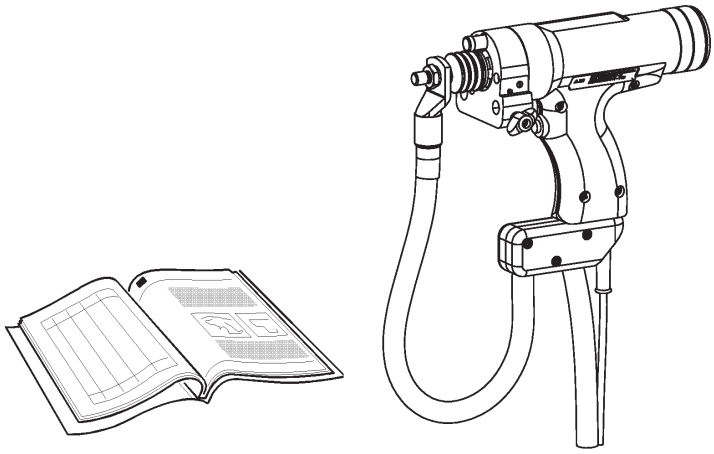

- Inspect the shipment for visible damage and completeness immediately on receipt.
- Report any transport damage or missing components immediately to the delivering shipping agent or the dealer (address, see page 2).

4 Accessories

For example:

Mounting tool set	93-40-116
Protective hose, complete with zipper	80-11-430

Additional accessories can be found in our extensive accessories catalogue.

All rights reserved – Reprinting, in whole or in part, only with the approval of the manufacturer

5 Technical Data

Stud welding gun typ A 22 (damped)
for drawn arc stud welding according to current standards

Welding range	dia. 16 to 22 mm (25 mm)
Stud length	20 to 300 mm (depending on leg assembly)
Stud material	Mild steel, stainless steel
Stud type	Any type or shape (special chucks if required)
Length compensation	9 mm automatic
Lift	Adjustment range 6 mm, (0.25 mm steps, arresting)
Damping	Adjustable oildamper
Welding cable	4.8 m, 95 mm²
IP Code	IP 20 (protect against humidity)
Workplace noise level	Up to 90 dB (A) may occur during welding
Ambient temperature limits	0 °C to 40 °C
Dimension L x B x H	260 x 74 x 220 mm (without cable, with tripod leg guidance)
Weight	2 kg (without cable), 7.5 kg (with cable)

©HBS Bolzenschweiss-Systeme GmbH & Co. KG
All rights reserved – Reprinting, in whole or in part, only with the approval of the manufacturer

Ceramic leg assembly
(not included in delivery)

for stud welding with ceramic ferrule according to current standards

Ceramic leg assembly PSC-2	**Order no. 93-40-040**

Welding range	Welding elements (FD/MD(DD)/PD/RD, UD/ND, ID) dia. 16 to 20 mm Shear connectors (SD) up to dia. 13 mm
Stud length	up to 150 mm
Dimension tripod legs	10 x 240 mm
Dimension food piece	Inner diameter d = 28 mm
Weight	0.388 kg

All rights reserved – Reprinting, in whole or in part, only with the approval of the manufacturer

Ceramic leg assembly PSC-2 **Order no. 93-40-041**

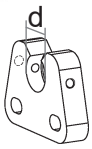

Welding range	Shear connectors (SD) dia. 16 mm, 5/8“, 3/4“, 7/8“
Stud length	up to 150 mm
Dimension tripod legs	10 x 240 mm
Dimension food piece	Inner diameter d = 29 mm
Weight	0.380 kg

Ceramic leg assembly PSC-2 **Order no. 93-40-074**

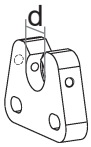

Welding range	Shear connectors (SD) dia. 16 mm, 5/8“, 3/4“, 7/8“
Stud length	up to 300 mm
Dimension tripod legs	10 x 390 mm
Dimension food piece	Inner diameter d = 29 mm
Weight	0.551 kg

©HBS Bolzenschweiss-Systeme GmbH & Co. KG
All rights reserved – Reprinting, in whole or in part, only with the approval of the manufacturer

6 Intended Use

The stud welding gun has been designed exclusively for use with standardised stud welding elements. The use of any other elements will result in the desired strength of the welded joint being diminished.

The stud welding gun must only be connected to HBS stud welding units.

◆ Always check with the operating manual of your stud welding unit whether this stud welding gun may be used.

Observation of the operating manual of the stud welding unit being used is also part of the intended use.

All rights reserved – Reprinting, in whole or in part, only with the approval of the manufacturer

7 Warranty

Please refer to the latest "General Terms and Conditions" for the scope of the warranty.

The warranty does not cover faults caused by e.g.

– Normal wear,
– Improper handling,
– Failure to observe the operating manual,
– Failure to observe the safety precautions,
– Use for other than the intended purpose, or
– Transport damage.

Warranty entitlement shall no longer be valid if modifications, changes or service and repair work is carried out by unauthorised persons or without the knowledge of the manufacturer. Invalidation of warranty entitlement shall also render the declaration of conformity invalid. The CE marking shall be declared invalid by the manufacturer.

We expressly point out that only spare parts and accessories or components approved by us may be used. The same applies likewise to installed units from our sub-suppliers.

©HBS Bolzenschweiss-Systeme GmbH & Co. KG

All rights reserved – Reprinting, in whole or in part, only with the approval of the manufacturer

8 Design and Function

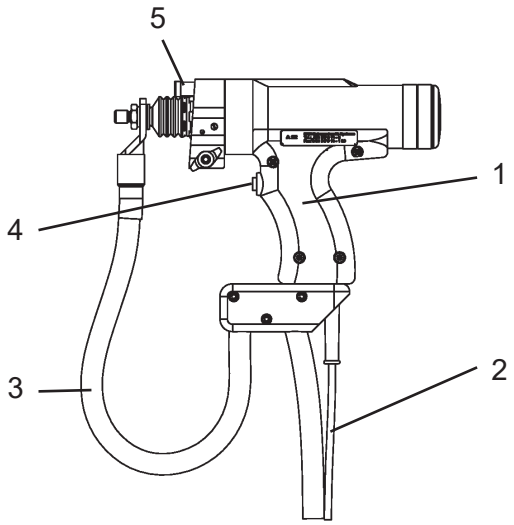

The body of the welding gun consists of a sturdy two-part **plastic housing (1)**.

The **control cable and the solenoid cable (2)** are connected through the welding gun handle to the welding gun. The **welding cable (3)** is externally connected.

Positioned at the front of the welding gun there is the chuck where the welding elements of the welding gun are manually fed.

A leg assembly with foot piece, where the ceramic ferrule grip is inserted, is used to position the welding gun vertically.

The springy welding elements are projecting out of the ceramic ferrule grip with ceramic ferrule. In this way, they can be positioned above the aluminum ball or the cone.

At the front of the welding gun handle, the **welding gun trigger (4)** is installed. It is used to trigger the welding process.

The **serial number (5)** is stamped on the welding gun handle.

The **protection cap (6)** is used to cover the damper.

Type plate

The type plate contains the following information:

– Manufacturer

– Type

All rights reserved – Reprinting, in whole or in part, only with the approval of the manufacturer

9 Welding Process

This stud welding gun may only be used for drawn arc stud welding.

◆ Please refer to the original operating manual of the connected stud welding unit for the welding procedure.

©HBS Bolzenschweiss-Systeme GmbH & Co. KG
All rights reserved – Reprinting, in whole or in part, only with the approval of the manufacturer

10 Preparing the Stud Welding Gun

Prepare the stud welding gun by

– mounting the leg assembly
– mounting the chuck
– adjusting lift and hydraulic damping
– adjusting the insertion depth (protrusion).

◆ Do not connect the stud welding gun to the stud welding unit **until it has been prepared**.

In this way you can avoid any unintentional starting of the welding process.

◆ Select a leg assembly suitable for your welding element:

Ceramic leg assembly PSC-2
Order no.: 93-40-040
(d = 28 mm)

for welding elements (FD/MD(DD)/PD/RD, UD/ND, ID)
dia. 16 to 20 mm up to length 150 mm

Ceramic leg assembly PSC-2
Order no.: 93-40-041
(d = 29 mm)

for shear connectors (SD)
dia. 16 mm up to length 150 mm

Ceramic leg assembly PSC-2
Order no.: 93-40-074
(d = 29 mm)

for shear connectors (SD)
dia. 16 mm up to length 300 mm

All rights reserved – Reprinting, in whole or in part, only with the approval of the manufacturer

◆ Select a chuck suitable for your welding element:

Threaded studs with reduced shaft (RD)

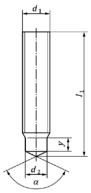

Stud-dimension Ø d_1	Chuck	Depth for stud in mm	Ceramic ferrule grip	Suitable leg assembly
M16	83-50-016	15	80-30-116	93-40-040
M20	83-50-020	15	80-31-262	93-40-040

Virtually fully-threaded studs (MD (DD))

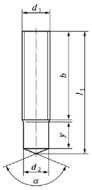

Stud-dimension Ø d_1	Chuck	Depth for stud in mm	Ceramic ferrule grip	Suitable leg assembly
M16	83-50-016	15	80-31-262	93-40-040

Partially threaded studs (PD)

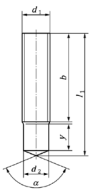

Stud-dimension Ø d_1	Chuck	Depth for stud in mm	Ceramic ferrule grip	Suitable leg assembly
M16	83-50-016	15	80-30-116	93-40-040
M20	83-50-020	15	80-31-262	93-40-040

Unthreaded studs (pins) (UD)

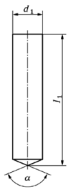

Stud-dimension Ø d_1	Chuck	Depth for stud in mm	Ceramic ferrule grip	Suitable leg assembly
16	83-50-016	15	80-31-262	93-40-040

©HBS Bolzenschweiss-Systeme GmbH & Co. KG
All rights reserved – Reprinting, in whole or in part, only with the approval of the manufacturer

Studs with internal thread (ID)

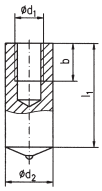

Stud dimension Ø d_2	Ø d_1	Chuck	Depth for stud in mm	Ceramic ferrule grip	Suitable leg assembly
16	M10	83-50-016	15	80-31-262	93-40-040

Shear connectors (SD)

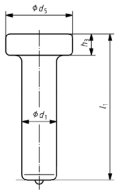

Spitzenform A

Stud dimension Ø d_1	Ø d_5	Chuck	Depth for stud in mm	Ceramic ferrule grip	Suitable leg assembly
16	32	83-53-019	12	80-30-219	93-40-041 / 93-40-074
19	32	83-53-019	12	80-30-219	
22	35	83-53-022	12	80-30-222	

10.1 Mounting the Chuck

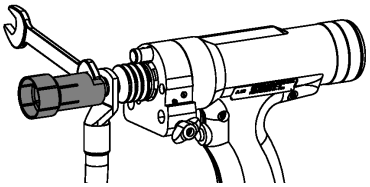

- Screw the chuck on the thread socket of the welding gun.
- Tighten the chuck firmly with a double open ended wrench AF 14/17 or AF 19/22 (accessory).

All rights reserved – Reprinting, in whole or in part, only with the approval of the manufacturer

10.2 Mounting the Leg Assembly

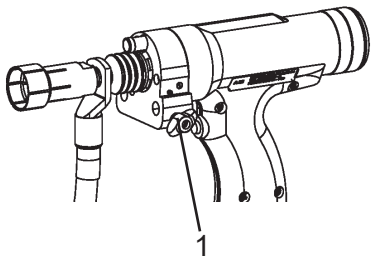

1 - Wing screw

◆ Loosen the wing screw (1).

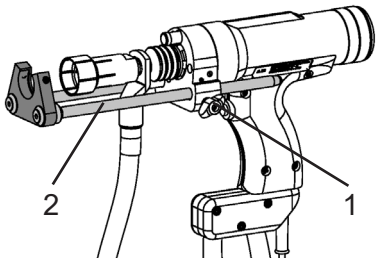

2 - Tripod leg

◆ Now attach the leg assembly to the stud welding gun.

◆ Clamp the tripod legs (2) with the wing screw (1).

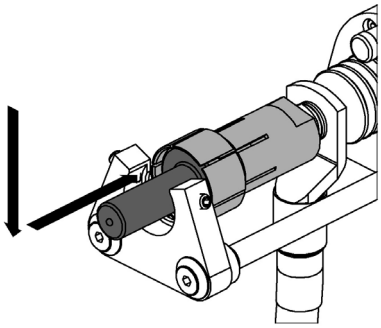

◆ Put the welding element up to the stop into the chuck.

Attention:
The welding element must firmly sit in the chuck, otherwise welding element and chuck would burn.

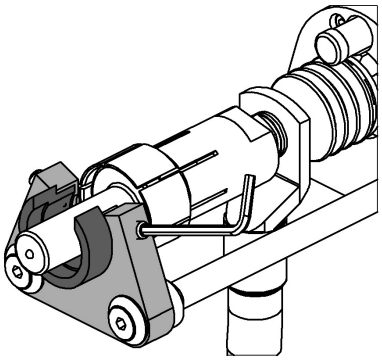

◆ Place the ceramic ferrule grip into the foot piece.

◆ Clamp the ceramic ferrule grip with an allen key 3 mm (accessory).

©HBS Bolzenschweiss-Systeme GmbH & Co. KG
All rights reserved – Reprinting, in whole or in part, only with the approval of the manufacturer

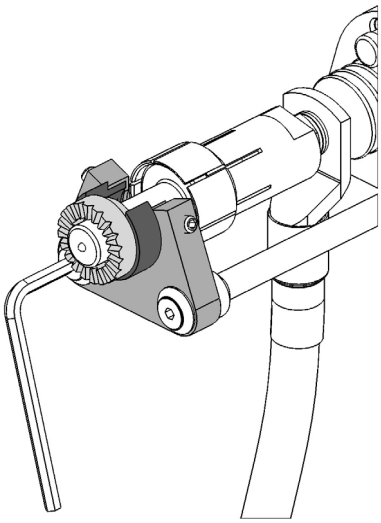

- Put on the ceramic ferrule.
- Adjust the foot piece until the stud can be moved in the ceramic ferrule without friction (centered).
- Tighten the foot piece with an allen key 4 mm (accessory).

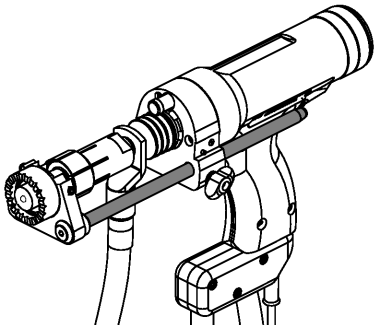

- Clamp the tripod legs with the wing screw.

All rights reserved – Reprinting, in whole or in part, only with the approval of the manufacturer

10.3 Setting the Welding Parameters

The insertion depth, lift and hydraulic damping are, among others, dependent on the workpiece and welding elements used and their diameters.

The specifications in the following table are guidelines.

◆ Select the applicable parameters for insertion depth, lift and hydraulic damping for your workpiece.

Welding elements Material: 4.8 (suitable for welding) / A2-50 [3]		Diameter of welding elements				IT 90, IT 2002		
		metric [4]		imperial (US)		Welding gun parameters A 22 [1]		
		Stud diameter in mm	eff. diameter in mm	Stud diameter in inches (approx.)	eff. dimeter in inches (approx.)	Insertion depth P in mm	Lift L in mm	Hydraulic damping
Material of workpiece: Mild steel (suitable for welding) / alloyed steel (suitable for welding) [3]								
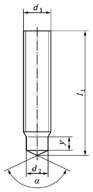		Ø d_1	Ø d_2	Ø d_1	Ø d_2			
	RD (MR) [2]	M16	13.2	5/8	0.520	3.0	2.0	2
	RD (MR) [2]	M20	16.5	3/4	0.650	3.5	2.2	2
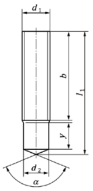		Ø d_1	Ø d_2	Ø d_1	Ø d_2			
	FD/PD/MD (DD) [2]	M16	14.60	5/8	0.575	3.0	2.0	2
	FD/PD/MD (DD) [2]	M20	18.38	3/4	0.724	4.0	2.5	2
		Ø d_1		Ø d_1				
	UD [2]	16		5/8		3.5	2.2	2
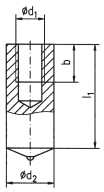		Ø d_1	Ø d_2	Ø d_1	Ø d_2			
	ID [2]	M10	16	3/8	0.630	3.5	2.2	2

[1] to be checked by test weldings

[2] Information and recommendations on this can be found in **DIN EN ISO 14555**.

[3] When welding on galvanized workpieces we recommend increasing the lift.

[4] according to **EN ISO 13918**

©HBS Bolzenschweiss-Systeme GmbH & Co. KG

All rights reserved – Reprinting, in whole or in part, only with the approval of the manufacturer

Welding elements Material: 4.8 (suitable for welding) / A2-50 [3]	Diameter of welding elements				IT 90, IT 2002		
	metric [4]		imperial (US)		Welding gun parameters A 22 [1]		
	Stud diameter in mm	eff. diameter in mm	Stud diameter in inches (approx.)	eff. diameter in inches (approx.)	Insertion depth P in mm	Lift L in mm	Hydraulic damping
Material of workpiece: Mild steel (suitable for welding) / alloyed steel (suitable for welding) [3]							
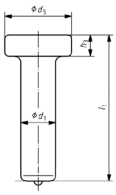 shape of tip A		Ø d_1	Ø d_1				
	SD [2]	16.0	5/8		3.5	3.0	2
	SD [2]	19.0	3/4		4.0	3.75	2
	SD [2]	22.0	7/8		4.5	4.5	2

[1] to be checked by test weldings

[3] When welding on galvanized workpieces we recommend increasing the lift.

[4] according to **EN ISO 13918**

The maximum adjustment values which can be set for the insertion depth (3.5 mm) as well as the lift (3 mm) should not be exceeded.

The specified values apply for welding in welding position PA.

All rights reserved – Reprinting, in whole or in part, only with the approval of the manufacturer

Adjusting Lift

The adjustment piece for lift must not be turned by more than 360°.

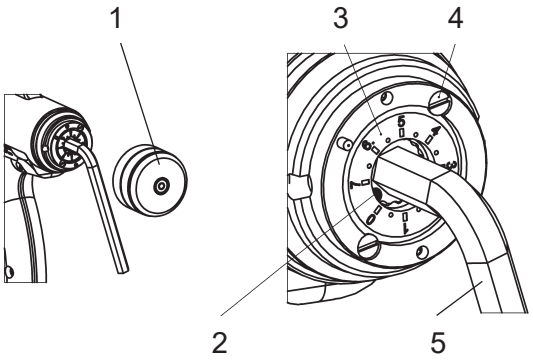

1 - Cap

2 - Marking

3 - Scale wheel

4 - Slotted screw

5 - Allen key size 8

- Screw off the cap (1) at the rear.
- Use the allen key to turn the adjustment piece for lift counter-clockwise to the selected lift *(see table under point 10.3)*.

The lift can be adjusted in steps of 0.25 mm. (The empty space between 0 and 0.25 mm serves to mechanically balance out the lifting ring construction).

- Screw on the cap again.
- You can **reduce** the lift by turning the adjustment piece for lift **clockwise**.
- You can **increase** the lift by turning the adjustment piece for lift **counter-clockwise**.

©HBS Bolzenschweiss-Systeme GmbH & Co. KG
All rights reserved – Reprinting, in whole or in part, only with the approval of the manufacturer

Setting the Insertion Depth (Protrusion)

The insertion depth characterizes the overlap size which would be achieved by welding element and base material with seated welding gun before welding. This overlap provides the melt for forming the weld collar.

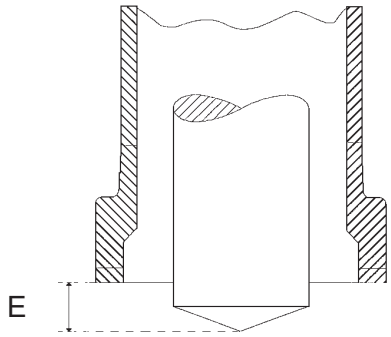

E = Insertion depth for welding elements with conical face

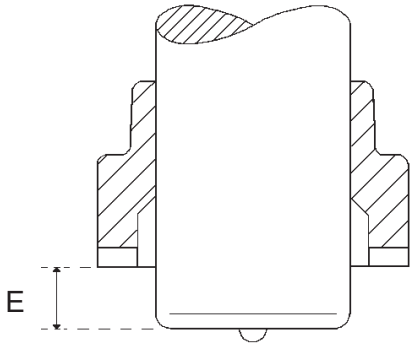

E = Insertion depth for welding elements with plane face

◆ Loosen the wing screw at the welding gun and adjust the insertion depth (*see table under point 10.3*).

Insertion depth X

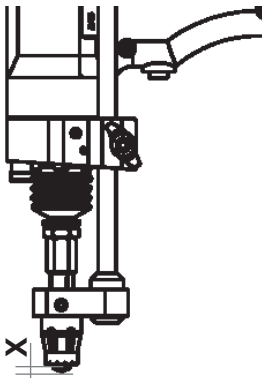

◆ Clamp the triopd legs with the wing screw.

All rights reserved – Reprinting, in whole or in part, only with the approval of the manufacturer

Adjusting the Hydraulic Damping

Your welding gun is delivered with damping adjustment 2.

☞ Adjusting the hydraulic damping is only required with **studs above 14 mm** diameter.

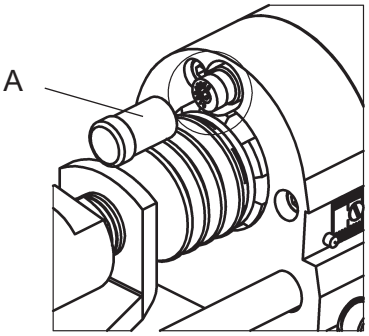

A - Protection cap hydraulic damping

◆ Screw off the protection cap of the hydraulic damping.

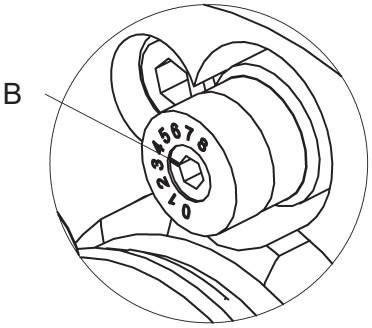

◆ Set the mark of the regulation screw (B) to the required number using an allen key (size 2).

Meaning:

0 - 2 low damping (high insertion speed),

3 - 5 medium damping and

6 - 8 high damping (low insertion speed).

☞ **Normally, a damping above „2“ should not be selected.**

A proper hydraulic damping must be determined via trials. The weld pool should not splash-off during plunging, on the other hand it should form a complete collar around the stud.

☞ ◆ **You should consider that the weight of the welding element increases the insertion speed when welding in horizontal position.**

When welding in sideway and especially in overhead position, the damping effect must be set lower than in horizontal position - also with larger welding elements.

©HBS Bolzenschweiss-Systeme GmbH & Co. KG

All rights reserved – Reprinting, in whole or in part, only with the approval of the manufacturer

☞ **There must be no friction between welding element and ceramic ferrule.**

◆ If so, **center the foot piece of the welding gun.**

☞ **When triggering the welding gun key, the welding gun lifts the welding element always by the same lift value, independant from the position of the welding element.**

Assignment stud diameter – electrical current – welding time with lift and protrusion:

Example:

Diameter of the welding element	Welding current	Welding time	
dia. 16 mm	1 300 A	0.65 s	with ceramic ferrule

Optimum parameters for an application may differ from indicated data due to plate thickness, welding position, coatings, type of ceramics ferrules etc.

◆ Based on stud diameter at the welding place, determine welding current and welding time, then lift and insertion depth depending on type of stud tips (to ceramic ferrule or face area). Note the insertion speed!

Example 1:

Diameter of welding element = 16 mm:
Welding current = 1 300 A, Welding time = 0.65 s,

flat stud tip (with alu ball):
lift = 3 mm, insertion depth = 3.5 mm, insertion speed = 100 mm/s.

All rights reserved – Reprinting, in whole or in part, only with the approval of the manufacturer

11 Welding

- **Work according to the *original operating manual of the HBS stud welding unit*.**

Danger if used other than for the intended purpose

- Use the stud welding gun only for ARC stud welding and only in combination with stud welding units from manufacturer:

HBS Bolzenschweiss-Systeme GmbH & Co. KG
Felix-Wankel-Strasse 18
85221 Dachau
GERMANY

- Always check with the operating manual of your stud welding unit whether this stud welding gun may be used.

©HBS Bolzenschweiss-Systeme GmbH & Co. KG
All rights reserved – Reprinting, in whole or in part, only with the approval of the manufacturer

12 Troubleshooting

Danger from insufficiently qualified operating personnel

- Carry out only the work described here on your stud welding unit or stud welding gun.
- Repairs may only be carried out by appropriately qualified personnel.
- Inform your dealer or your maintenance department.

Fault	Possible cause	Fault localisation	Fault remedy	Performance
Welding elements not firmly attached	Wrong welding parameters selected	Check adjusted parameters on stud welding unit	Change adjusted parameters	Trained personnel
		Check lift of welding gun	Change adjusted parameters	Trained personnel
		Check lift of welding gun	Change adjusted parameters	Trained personnel
	Insertion speed of welding element too low	Check welding piston and linear bearing for ease of movement *)	Clean or replace *)	Qualified specialists
Burning marks at the welding element	Chuck defective	Check chuck for possible defects	Replace chuck	Trained personnel
	Lamellas of chuck are not pretensioned	Check lamellas of chuck	Try to bend lamellas if possible, otherwise replace chuck	Trained personnel
Welding gun does not weld	Wrong welding parameters selected	Check lift on the stud welding gun	Change adjusted parameters	Trained personnel
		Check protrusion (insertion depth) on the stud welding gun	Change adjusted parameters	Trained personnel
	Control cable defective (no trigger signal available on stud welding unit)	Check control cable for electrical flow at control cable sleeve (Pin 3 and 4) with pressed welding gun trigger *)	In case of no signal: Replace control cable *)	Qualified specialists
	Micro switch defective (no trigger signal available at stud welding unit)	Check control cable for electrical flow at control cable sleeve (Pin 3 and 4) with pressed welding gun trigger *)	In case of no signal: Replace micro switch *)	Qualified specialists
	Welding current cable defective (no contact signal on stud welding unit)	Check, whether welding current cable is connected to stud welding unit in a technically correct way	Connect welding current cable	Trained personnel
		Check welding current cable for electrical flow *)	In case of no flow : Replace welding current cable and/or connecting cable *)	Qualified specialists

All rights reserved – Reprinting, in whole or in part, only with the approval of the manufacturer

Fault	Possible cause	Fault localisation	Fault remedy	Performance
Welding gun does not weld	Ground connection defective (no contact signal on stud welding unit)	Check, whether ground cable is connected to workpiece in a technically correct way	Connect ground cable	Trained personnel
		Check ground cable for electrical flow *)	In case of no flow: Replace ground cable *)	Qualified specialists
	Stud welding unit defective	Follow the instructions of the connected stud welding unit	Repair required	Factory service or authorised agencies
Welding gun does not lift, in spite of , and	Short circuit of magnetic circuit of the welding gun	Meassure resistance value at control cable connector (18 Ω to 22 Ω) between Pin 1 and Pin 2 *)	Replace control cable connector, control cable and solenoid *)	Qualified specialists
	Solenoid defective	Meassure solenoid (18 Ω to 22 Ω) *)	Replace solenoid *)	Qualified specialists
No display	Magnetic circuit interrupted	Meassure resistance value at control cable connector (18 Ω to 22 Ω) between Pin 1 and Pin 2 *)	Replace solenoid or control cable *)	Qualified specialists

Work marked with *) may only be carried out by qualified electricians!

- Please contact our Service department if none of the measures described remedies the situation.
- Please use the form „Service & Support“ in the annex to send in the stud welding unit or stud welding gun.

©HBS Bolzenschweiss-Systeme GmbH & Co. KG

All rights reserved – Reprinting, in whole or in part, only with the approval of the manufacturer

13 Maintenance and Care

Electric shock hazard

- Never perform maintenance and service work on your stud welding gun while it is connected to the stud welding unit
- Prior to this disconnect the stud welding gun from the stud welding unit.

Danger from insufficiently qualified operating personnel

- Carry out only the work described here on your stud welding gun.
- Repairs may only be carried out by appropriately qualified personnel.
- Inform your dealer or your maintenance department.

13.1 Cleaning

- Clean the casing of your stud welding gun with a slightly damp washcloth, when necessary.

- **Do not use solvents for cleaning.**

  These may damage plastic components.

All rights reserved – Reprinting, in whole or in part, only with the approval of the manufacturer

13.2 Inspection and Tests

- Inspect the chuck before every use.
- Replace the chuck if you discover burning marks on the welding element and/or on the chuck.
- Work here in accordance with *point 10.1 „Mounting the chuck“* in this manual.
- Before every use, inspect the bellows on the front part of the stud welding gun for proper seating and/or damage.

- **Never work with damaged or incorrectly seated bellows**.

  This will contribute to a long service life of your stud welding gun.

- Inform your dealer or maintenance department if you discover any damage.

- Before every use, check that the type designations and adjustment aids on the stud welding gun are still legible.
- Clean the type plates in the event of soiling.
- Replace any type plates that are damaged or no longer legible.

©HBS Bolzenschweiss-Systeme GmbH & Co. KG

All rights reserved – Reprinting, in whole or in part, only with the approval of the manufacturer

13.3 Adjusting the Lift Scale

The lift scale can only be adjusted with connected and switched on stud welding unit.

- Observe the safety instructions in the operating manual of the connected stud welding unit.
- Refer here to the operating manual of your stud welding unit.

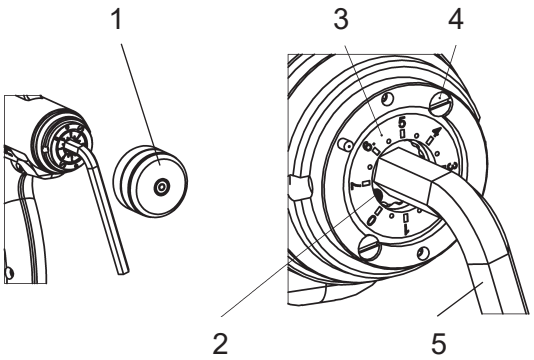

1 - Cap
2 - Marking
3 - Scale wheel
4 - Slotted screw
5 - Allen key size 8

- Screw off the cap at the rear.
- Now screw in the lift up to the stop by turning clockwise.
- Now screw out the lift step by step by turning counter-clockwise.
- Push the welding gun trigger and check if lift is triggered.
- Repeat this procedure until a lifting motion at the chuck is visible.
- Lock this position with an allen key (size 8).
- Loosen both slotted screws.
- Adjust the scale wheel by turning and setting the zero position onto the marking.
- Then tighten the slotted screws.
- Screw on the cap again.

Now the scaling ‘Lift’ is adjusted.

All rights reserved – Reprinting, in whole or in part, only with the approval of the manufacturer

14 Storage

- Store the stud welding gun in a safe and dust-free location when not in use.
- Protect the stud welding gun from moisture and metallic contamination.

- Store the stud welding gun only under the following ambient conditions.

Storage temperature:

-5 °C to +50 °C (23 °F to 122 °F)

Relative humidity:

0 % - 50 % at +40 °C (104 °F)
0 % - 90 % at +20 °C (68 °F)

15 Disposal

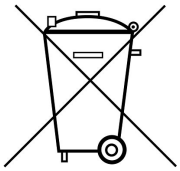

- Dispose of the stud welding gun only via the manufacturer or a specialist disposal company.
- Never dispose of the stud welding gun in the domestic refuse.

©HBS Bolzenschweiss-Systeme GmbH & Co. KG
All rights reserved – Reprinting, in whole or in part, only with the approval of the manufacturer

Declaration of Incorporation of partly completed Machinery

to Directive 2006/42/EC, Annex II 1 B
(Original Declaration of Incorporation)

Herewith the manufacturer

HBS Bolzenschweiss-Systeme GmbH & Co. KG
Felix-Wankel-Strasse 18
P.O. Box 13 46
85221 Dachau
GERMANY

Phone +49 8131 511-0
Fax +49 8131 511-100

declares for the following product

Machine information: Stud welding gun
Type: A 22
Order No: 93-20-290C
Serial No: 93-20-290C/242XXXX
Year of manufacture: 2024

that the following essential requirements of the above mentioned Directive – including changes to the Directive to be applied at the moment of this declaration – were applied and fulfilled:

Annex I, Article 1, 1.1.2, 1.1.3, 1.1.5, 1.1.6, 1.1.7, 1.2.1, 1.2.2, 1.2.3, 1.2.4.1, 1.2.6, 1.3.1, 1.3.2, 1.3.3, 1.3.4, 1.3.7, 1.3.8, 1.3.9, 1.4.1, 1.4.2.1, 1.5.1, 1.5.2, 1.5.4, 1.5.5, 1.5.6, 1.5.8, 1.5.10, 1.5.11, 1.5.15, 1.5.16, 1.6.1, 1.6.2, 1.6.3, 1.6.4, 1.7.1.1, 1.7.2, 1.7.3, 1.7.4,

that special technical documentation was compiled in accordance with Part B of Annex VII of the above mentioned regulation and will be transmitted, in response to a reasoned request by the national authorities as follows:

The above mentioned documents will be transmitted by e-mail as a data file in German language.

that this partly completed machinery must not be put into service until the final machinery into which it is to be incorporated has been declared in conformity with the provisions of the Directive, where appropriate.

that this incomplete machine complies with corresponding regulations of the following additional EU Directives, including any changes to be applied at the moment of this declaration:

„Electromagnetic compatibility“ 2014/30/EU

Protection targets of the low voltage regulation were kept to appendix I, no. 1.5.1 of the machine regulation.

Persons who are based in the European community and who are authorised to compile the technical documentation:

Name: Address: see manufacturer

Dachau, 02.01.2024
Place of issue, Date

Anja Bloch (CEO HBS)

All rights reserved – Reprinting, in whole or in part, only with the approval of the manufacturer

Service & Support

With the return please attach a copy of the filled out form together with the repair number given by HBS! Repairs without repair number will not be processed.

Repair number
(given by HBS)

_____

Company: _____
Name / Surname: _____
Street: _____
City, State and ZIP/Postcode: _____
Country: _____
Phone & Fax: _____
E-mail address: _____

Stud welding unit / stud welding gun type of model: _____
Serial number: _____
Date of purchase: _____
Purchased at distributor: _____

Detailed descriptions of errors: _____

Service & Support may be done up to the value of EUR _____ without quotation: ☐ Yes ☐ No

Could you find any damage / burn marks

on the cables: ☐ Yes ☐ No

on chucks: ☐ Yes ☐ No

Are all plug and screw connections tightly fastened *: ☐ Yes ☐ No

Are there any burn marks on plug or screw connections: ☐ Yes ☐ No

Is there any other visual damage (e.g. cracks, dents): ☐ Yes ☐ No

Have you checked the fuses: ☐ Yes ☐ No

Default on the display of the stud welding unit:

ARC / IT					CD / CDM / SC					
○	⊗				●		⊗			**

Which LED´s are illuminated (please mark with a cross)?

Please e-mail or fax this form to service@hbs-info.de or fax: +49 8131 511-100.
In case a repair is necessary a repair number will be given!

* See also operating manual chapter „Connection“
** Doesn´t light when using a contact welding gun

©HBS Bolzenschweiss-Systeme GmbH & Co. KG
All rights reserved – Reprinting, in whole or in part, only with the approval of the manufacturer

Index

A
accessories 13
airborne particulates 7
automatic welding head. 12

B
bang. 8
basic configuration. 13

C
capacitor 12
cleaning 35
clothing, non-flammable 8
control cable 19

D
danger from incorrect use 6
Declaration of Incorporation 39
disposal 38

E
ear protection. 10
electrical hazards. 10
electric arc 12
electromagnetic fields 10
EMF directive, safety notices. 9

F
fire extinguisher 8
fire hazard 8
form „Service & Support“. 34, 40
full-ear hearing protection 8
fumes, harmful to health 7

G
glossary 12
goggles with visor 8

H
hazards for the machine 10
hazards for the operator 10
heart pacemaker 7, 10
helmet 8
hydraulic damping 26
hydraulic damping, adjusting 30

I
insertion depth 26
insertion depth, setting 29
intended use 17, 32

L
lift 26
lift adjusting 28

M
maintenance and care 35
mounting the chuck 23

O
operating manual. 13

P
protection cap 19
protective apron. 8
protective equipment 8
protective equipment, personal 10
protective gloves 8

R
rectifier. 12

S
safety goggles 10
safety goggles with sight glass 8
safety precautions 6
scope of supply 13
serial number. 19
solenoid cable 19
storage. 38
storage temperature 38
stud feeder. 12
stud welding gun 12
stud welding system 12
stud welding unit 12
symbols used. 10

T
troubleshooting 33
type plate. 19

W
warranty entitlement 18
welding cable. 19
welding element. 12, 17
welding gun, design. 19
welding gun trigger 19
welding parameters 12, 26
workpiece 12

All rights reserved – Reprinting, in whole or in part, only with the approval of the manufacturer

©HBS Bolzenschweiss-Systeme GmbH & Co. KG
All rights reserved – Reprinting, in whole or in part, only with the approval of the manufacturer

HBS Bolzenschweiss-Systeme GmbH & Co. KG
Felix-Wankel-Strasse 18 • 85221 DACHAU • GERMANY
Phone +49 8131 511-0 • Fax +49 8131 511-100 • E-mail international@hbs-info.com

www.hbs-info.com