ARC 800

Stud Welding Unit

93-15-0704A

Operating Manual

2023

After-sales service for Germany:

HBS Bolzenschweiss-Systeme GmbH & Co. KG
Felix-Wankel-Strasse 18
85221 DACHAU
GERMANY

Phone	**+49 8131 511-0**
Fax	**+49 8131 511-100**
E-mail	**international@hbs-info.com**
Web	**www.hbs-info.com**

ARC 800 Operating Manual Issue 2023-01 Order No. CA-BA 93-15-0704A

Translation of the Original Operating Manual

Please keep the manual in a safe place for future reference.

Transmission and duplication of this document, dissemination and notification of the contents are not permitted unless expressly approved.

All rights, errors and technical amendments reserved.

© HBS Bolzenschweiss-Systeme GmbH & Co. KG

Dear Customer,

Many thanks for buying a stud welding machine from HBS Bolzenschweiss-Systeme.

We at HBS wish you success at all times when working with this stud welding machine.

The high level of quality of our products is guaranteed by ongoing further development in the design, equipment and accessories. This may result in differences between the present operating manual and your product. No claims can therefore be derived from the data, illustrations and descriptions.

We have compiled the data and information in this reference work with the greatest care, and have made every effort to ensure that the information contained in this manual was correct and up-to-date at the time of delivery. We can nevertheless give no guarantee for an absolutely error-free document.

Should you discover any errors or unclear points when reading this operating manual, please do not hesitate to contact us.

We would also be grateful for any feedback should you have any suggestions or complaints to make about our product.

HBS Bolzenschweiss-Systeme GmbH & Co. KG

Felix-Wankel-Strasse 18

85221 Dachau

GERMANY

All rights reserved – Reprinting, in whole or in part, only with the approval of the manufacturer

Table of Contents

1 Important Safety Precautions 6

2 Symbols and Terms Used 10

3 Scope of Supply 13

4 Accessories 13

5 Technical Data 14

6 Intended Use 15

7 Warranty 16

8 Components of the Stud Welding Unit 17

8.1 Main Assemblies 17
8.2 Control Panel and Display 19
8.3 LED Display 20

9 Welding Process 21

Drawn-Arc Stud Welding 21

10 Preparing Workplace and Welding Process 27

10.1 Preparing Surfaces 28
10.2 Checking the Stud Welding Gun 29
10.3 Checking the Stud Welding Head 29
10.4 Checking the Automatic Stud Feeder 29

11 Connection 30

11.1 Connecting the Welding Gun to the Stud Welding Unit 31
11.2 Connecting the Welding Head to the Stud Welding Unit 31
11.3 Connecting the Fully Automatic Stud Feeder to the Stud Welding Unit 32
11.4 Shielding Gas Connection 32

©HBS Bolzenschweiss-Systeme GmbH & Co. KG

All rights reserved – Reprinting, in whole or in part, only with the approval of the manufacturer

11.5 Connecting the Compressed Air Connection for Automatic Stud Feeding 34
11.6 Connecting the Ground Cable 36
11.7 Connecting the Stud Welding Unit to the Mains Supply 37
11.8 Integrate the Stud Welding Unit into a CNC System 38
11.8.1 External Welding Start 40
11.8.2 Contact 41

12 Welding 42

12.1 Switch on the Stud Welding Unit 42
12.2 Determining the Welding Time 43
12.3 Checking Shielding Gas Flow Rate 45
12.4 Setting the Welding Parameters 46
Adjusting the Welding Time 46
Adjusting the Gas Pre-Flow Time 46
Adjusting the Stud Feeding Time (Blow Time) 47
12.5 Performing the Welding Process 48

13 Checking the Quality of the Weld 52

13.1 Carrying out Visual Inspection 52
13.2 Carrying out Bending Test 53
13.3 Optimisation of Welding Parameters 55
13.4 Blowing Effect and Remedies 56

14 Troubleshooting 57

15 Shutting Down 59

16 Maintenance and Care 60

16.1 Cleaning 60
16.2 Inspection and Tests 61

17 Storage 62

18 Disposal 62

Service & Support 63

Index 64

©HBS Bolzenschweiss-Systeme GmbH & Co. KG

All rights reserved – Reprinting, in whole or in part, only with the approval of the manufacturer

1 Important Safety Precautions

The target group for this manual are qualified personnel who in view of their technical training, know-how and experience and knowledge of applicable regulations are able to assess the work assigned to them and recognise potential hazards.

Danger from incorrect use

- Use the stud welding machine only for the purpose described in this manual.

Otherwise you may endanger yourself or damage the stud welding machine.

You endanger yourself and others if you operate the stud welding machine incorrectly or fail to observe the safety precautions and warnings. This can lead to serious injury or extensive material damage.

Danger for unauthorised operating personnel

- Work with the stud welding machine only when
  - You are appropriately trained, instructed and authorised to do so, and
  - You have read and completely understood this operating manual.
- Never work with the stud welding machine when you are under the influence of
  - Alcohol,
  - Drugs or
  - Medication.

Danger from unauthorised modifications

- Never modify the stud welding machine or parts thereof without obtaining a clearance certificate from the manufacturer.

You will otherwise endanger yourself. This can lead to serious injury or extensive material damage.

©HBS Bolzenschweiss-Systeme GmbH & Co. KG

All rights reserved – Reprinting, in whole or in part, only with the approval of the manufacturer

Life-threatening danger for wearers of active implanted cardiac devices

Danger for workers at particular risk within the meaning of the EMF directive

Persons at particular risk within the meaning of the EMF directive are:

– Workers with active implanted medical devices
– Workers with passive implanted medical devices that contain metal
– Workers with medical devices worn on the body
– Pregnant workers.

◆ Never operate the stud welding machine if you are among the group of workers at particular risk within the meaning of the EMF directive.
◆ In this case, never remain in the vicinity of the stud welding machine during welding.
◆ Never operate the stud welding machine if persons are located nearby who are among the group of workers at particular risk within the meaning of the EMF directive.

Strong electromagnetic fields are produced in the vicinity of the stud welding machine during welding. These fields can adversely affect the function of medical devices as well as the course of a pregnancy.

Danger from fumes and airborne particulates

◆ Switch on the welding fume extractor at the place of work.
◆ Ensure that the room is well ventilated.
◆ Never weld in rooms with a ceiling height of less than 3 m.
◆ Observe furthermore your working instructions and the accident prevention regulations.

This will help to avoid health damage due to fumes and airborne particulates.

All rights reserved – Reprinting, in whole or in part, only with the approval of the manufacturer

Danger from glowing metal spatter (fire hazard)

Glowing hot weld spatter and liquid splashes, flashes of light and a loud bang > 90 dB (A) must be anticipated during stud welding.

- Inform colleagues working in the immediate vicinity accordingly before starting work.
- Ensure that an approved fire extinguisher is available at the workplace.
- Do not weld when wearing working clothes soiled with flammable substances such as oil, grease, petroleum, etc.
- Wear your proper protective equipment, such as:
  - Protective gloves in accordance with the relevant standard,
  - Non-flammable clothing,
  - A protective apron over your clothing,
  - Full-ear hearing protection in accordance with the relevant standard,
  - A safety helmet when welding above your head,
  - Safety shoes,
  - Safety goggles with sight glass of protection level 2 in compliance with the applicable standards and do not look directly into the electric arc.
- Remove all flammable materials and liquids from the vicinity of the work area before starting welding.
- Weld at a safe distance from flammable materials or liquids. Select a safety distance large enough to ensure that no danger can arise from weld spatter.

Protection of the stud welding unit

- Protect the stud welding machine against the ingress of foreign matter and liquids caused by cutting or grinding work in the vicinity of your work area.

This will help to prolong the service life of your stud welding machine.

©HBS Bolzenschweiss-Systeme GmbH & Co. KG

All rights reserved – Reprinting, in whole or in part, only with the approval of the manufacturer

Safety notices in accordance with EMF directive 2013/35/EU

Currents flowing through electrical conductors during stud welding cause electric and magnetic fields that can occur, in particular, near the hand-held welding guns, the welding arrangement (e.g., welding cables) and the welding power sources.

Due to the high currents, high EMF exposures may occur.

Danger for workers at particular risk within the meaning of the EMF directive

Persons at particular risk within the meaning of the EMF directive are:

- Workers with active implanted medical devices
- Workers with passive implanted medical devices that contain metal
- Workers with medical devices worn on the body
- Pregnant workers.

Strong electromagnetic fields are produced in the vicinity of the stud welding machine during welding.

To reduce the danger posed by electromagnetic fields, we recommend, among other things, the following rules of conduct:

◆ Lay all cables as close together as possible.

For proper bundling and safeguarding of the cables, HBS offers protective tubes in various sizes.

◆ Do not position yourself between the welding cables.

◆ Only lay the cables to one side and position them as far as possible from the operating personnel.

◆ Do not loop the cables over your body, especially not at head level.

◆ Completely unwind the welding cables.

◆ Use the shortest possible welding cables.

◆ Place portable welding power sources as far away as possible while welding.

◆ If possible, do not operate welding power sources in the immediate vicinity of other persons, do not sit directly next to the welding power source while working and do not lean against it.

◆ In addition to these safety notices, also observe your work instructions and accident prevention regulations.

All rights reserved – Reprinting, in whole or in part, only with the approval of the manufacturer

2 Symbols and Terms Used

The symbols used in this operating manual have the following meanings:

Danger

Warns you of hazards that can lead to **injury of persons** or to **considerable material damage.**

Caution

Problems in operating **may occur** if this information **is not observed.**

No access for people with active implanted cardiac devices

No access for persons with implants made of metal

No access for pregnant women

Danger

Warns you of **electrical** hazards

Danger

Warns you of **electromagnetic fields** that can be generated during welding

These symbols prompt you to wear **personal protective equipment when working with the stud welding unit**.

This symbol prompts you to wear **ear protection**. **A loud bang > 90 dB (A) can occur during the welding process.**

©HBS Bolzenschweiss-Systeme GmbH & Co. KG

All rights reserved – Reprinting, in whole or in part, only with the approval of the manufacturer

Tip

Cross-reference to **useful information** on the use of the stud welding machine

Cross-references in this operating manual are marked with this symbol or ***are printed in italics***

Fire hazard

Have a suitable fire extinguisher for the working area ready before starting work.

◆ **Work instruction**

– **List**

©HBS Bolzenschweiss-Systeme GmbH & Co. KG

All rights reserved – Reprinting, in whole or in part, only with the approval of the manufacturer

Glossary

Automatic welding head:	Device for welding of welding elements
Capacitor:	Component for storage of electrical energy.
Electric arc:	Autonomous gas discharge between two electrodes when the current is high enough. A whitish light is emitted in the process. The electric arc allows very high temperatures to be generated.
Rectifier:	Electrical component that converts alternating voltage into direct voltage
Stud feeder:	Device for automatic feeding of welding elements
Stud welding gun:	Device for welding of welding elements
Stud welding system:	Stud welding unit including stud welding gun or welding head
Stud welding unit:	Device for provision of the electrical energy for stud welding
Thyristor:	Electronic component for contact-free switching of high currents; switching takes place via the control input
Welding element:	Component such as stud or pin that is welded to the workpiece
Welding parameters:	Mechanical and electrical settings at the stud welding gun or welding head and at the stud welding unit (e.g. spring force, charging voltage)
Workpiece:	Components such as sheet metal or tubes to which the welding elements are to be fastened

©HBS Bolzenschweiss-Systeme GmbH & Co. KG

All rights reserved – Reprinting, in whole or in part, only with the approval of the manufacturer

3 Scope of Supply

The **basic configuration** of your stud welding unit contains the following parts:

No. of pieces	Part	Type	Order No.
1	Stud welding unit	ARC 800	93-15-0704A
1	Operating manual	ARC 800	CA-BA 93-15-0704A

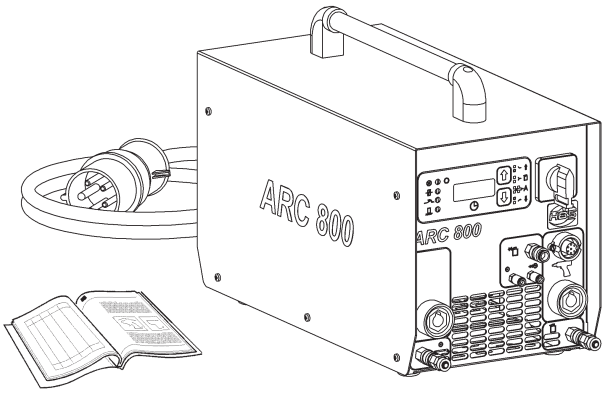

- Inspect the shipment for visible damage and completeness immediately on receipt.
- Report any transport damage or missing components immediately to the delivering shipping agent or the dealer (address, see page 2).

4 Accessories

The following **accessories are available**:

No. of pieces	Part	Type	Order No.
1	Ground cable for	CA 08/A 12/A 12-FL/ A 16 5 m, 25 mm²	93-40-020

All rights reserved – Reprinting, in whole or in part, only with the approval of the manufacturer

5 Technical Data

Stud welding unit ARC 800

for ARC stud welding according to current standards

Welding range	Dia. 14 ga to 3/8“, #4 to 1/2“ (dia. 2 to 10 mm, M3 to M12 (Type RD))
Welding material	Mild steel, stainless steel
Welding rate	7 to 17 studs/min (depending on application and stud dia.)
Welding current	800 A
Welding time	5 to 1 000 ms
Primary power	575 V, 3 Phases, 50/60 Hz, 35 AT (alternative input voltages available)
Power source	Transformer/Rectifier
Cooling type	F (temperature controlled cooling fan)
IP Code	IP 23 (also permits operation outdoors)
Ambient temperature limits	32 °F to 104 °F (0 °C to 40 °C)
Dimension L x W x H	18.50“ x 9.06“ x 8.66“ (470 x 230 x 220 mm) without handle
Weight	88.185 lbs (40 kg)

©HBS Bolzenschweiss-Systeme GmbH & Co. KG

All rights reserved – Reprinting, in whole or in part, only with the approval of the manufacturer

6 Intended Use

Our stud welding units are designed and built exclusively for industrial use. Nonindustrial use is expressly forbidden due to the lack of know-how about the welding technology employed and the applicable standards.

The stud welding unit is intended exclusively for stud welding of standardised welding elements. Any other use will result in the desired strength of the welded joint being reduced.

This stud welding unit can only be used with the HBS stud welding guns A 12, A 12-FL, A 16 and CA 08, the automatic welding gun PAH-1, the welding heads KAH 412 and KAH 412 LA as well as the automatic stud feeder VBZ-3.

The intended use also implies observance of the operating manual on the component used and compliance with the intervals and conditions for inspection and maintenance of the stud welding unit and the components employed.

◆ Always check the operating manual of your stud welding gun whether it may be used with this stud welding unit.

The stud welding unit must be suitable for welding the welding elements in use.

Welding elements manufactured with the cold formed process have a flange and an ignition tip. During welding, the flange prevents the arc getting to the cylindric part of the welding element and increases simultaneously the welding area.

◆ **Please refer to the operating manual of your stud welding gun for detailed information on which welding elements may be used.**

All rights reserved – Reprinting, in whole or in part, only with the approval of the manufacturer

7 Warranty

Please refer to the latest "General Terms and Conditions" for the scope of the warranty.

The warranty does not cover faults caused by e.g.

– Normal wear,
– Improper handling,
– Failure to observe the operating manual,
– Failure to observe the safety precautions,
– Use for other than the intended purpose, or
– Transport damage.

Warranty entitlement shall no longer be valid if modifications, changes or service and repair work is carried out by unauthorised persons or without the knowledge of the manufacturer. Invalidation of warranty entitlement shall also render the declaration of conformity invalid. The CE marking shall be declared invalid by the manufacturer.

We expressly point out that only spare parts and accessories or components approved by us may be used. The same applies likewise to installed units from our sub-suppliers.

©HBS Bolzenschweiss-Systeme GmbH & Co. KG

All rights reserved – Reprinting, in whole or in part, only with the approval of the manufacturer

8 Components of the Stud Welding Unit

8.1 Main Assemblies

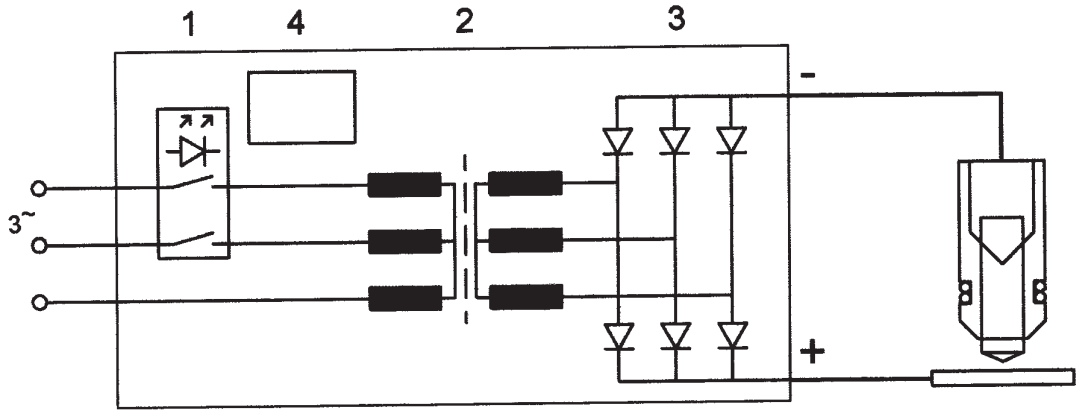

1 - Solid-State-Relais

2 - Transformer

3 - Rectifier

4 - Control unit

Mains alternating current is transformed in the **transformer (2)** and converted in the **rectifier (3)**.

The **control unit (4)** synchronizes the mechanical sequence (lifting the welding element) with the electronic control (ignition of pilot arc, ignition of main arc, sequence of welding time). The welding time is stepless adjustable.

The type plate is located on the backside of the stud welding unit.

All rights reserved – Reprinting, in whole or in part, only with the approval of the manufacturer

Type plate

The type plate contains the following information:

- Manufacturer
- Type
- Order No./Serial No.
- Primary voltage
- Fuse
- Power consumption
- Cooling class
- IP Code
- Date

©HBS Bolzenschweiss-Systeme GmbH & Co. KG

All rights reserved – Reprinting, in whole or in part, only with the approval of the manufacturer

8.2 Control Panel and Display

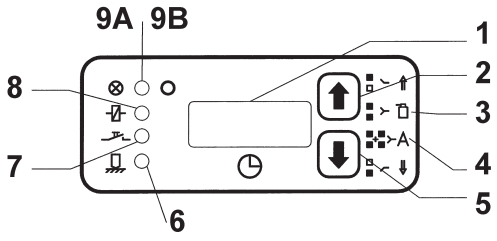

1 - Display
2 - Longer
3 - Shielding gas
4 - Automation
5 - Shorter
6 - Contact
7 - Trigger
8 - Solenoid
9 - Stand-by display
  9A - Locked
  9B - Ready for welding

The condition of the welding unit is monitored after switching-on.

After self-test, the digital display shows the last set welding time.

The welding time is shown at the **display (1)**.

The welding time is set with the arrow keys (⬆ **longer (2)** - ⬇ **shorter (4)**).

All rights reserved – Reprinting, in whole or in part, only with the approval of the manufacturer

8.3 LED Display

There is a luminous indication (LED) to the left of the display:

○	Green	The stud welding unit is ready for welding.
⊗	Red	The stud welding unit is locked – after welding, until there is electrical contact with the work-piece – if the stud welding unit is overheated (the display shows 8 .. 2). After a short cooling period, the work can continue.
	Green	lights if the solenoid of the welding gun is controlled
	Green	lights if the welding gun button is triggered
	Yellow	lights if there is electrical contact between welding element and workpiece

©HBS Bolzenschweiss-Systeme GmbH & Co. KG
All rights reserved – Reprinting, in whole or in part, only with the approval of the manufacturer

9 Welding Process

Stud welding with a drawn arc process is divided into drawn-arc stud welding with ceramic ferrule and drawn-arc stud welding with shielding gas. This stud welding unit must be used exclusively for stud welding with drawn arc.

The face of a stud-shaped welding element and the opposite surface of the workpiece are molten by an arc. Stud welding is suitable for the welding of joining elements across the entire cross-section, mainly using pin-shaped metallic welding elements with metallic workpieces.

The various processes of arc stud welding are distinguished by:

– The method of weld pool protection (shielding gas - SG, ceramic ferrule - CF or no protection - NP)
– The length of welding time (standard ARC or short-cycle drawn-arc stud welding - SC)
– The energy source (welding rectifier supplied by mains, inverter, capacitor battery).

Drawn-Arc Stud Welding

The HBS stud welding unit operates by process of ‘arc stud welding with drawn-arc ignition’ according to the current standards. The standards assign this method of joining pin-shaped elements with plane workpieces to the so called ‘Arc Pressure Welding’.

Joining is carried out in plastic or liquefied condition of the welding zone. The process can be carried out mechanically or automatically, depending on the used welding guns/welding heads.

Generally, the positive pole of the stud welding unit is connected to the workpiece. The welding element is manually or automatically inserted into the chuck of the welding gun or of the welding head. Then it is placed onto the workpiece - possibly equipped with a ceramic ferrule (see figure, **position 1**). When the button of the welding gun is triggered, the automated welding process starts, which works as follows:

All rights reserved – Reprinting, in whole or in part, only with the approval of the manufacturer

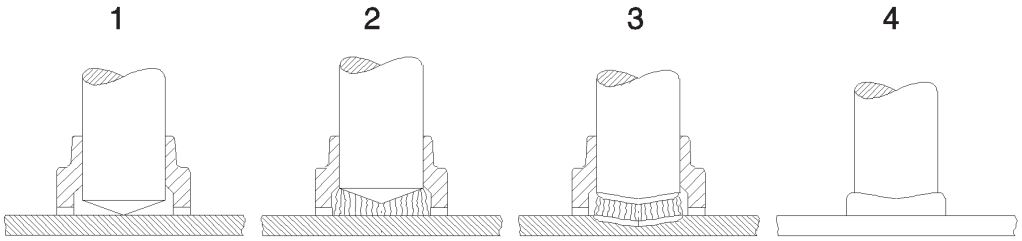

– At the beginning of the welding process, the welding element (stud) in the welding gun is lifted clear off the workpiece by a lifting device (solenoid). An initial switched current triggers a pilot arc of a low current power (see figure, **position 2**). Then the main arc ignites between the face area of the welding element and the workpiece.

– The main arc burns at the set current during the welding time preselected at the stud welding unit. The selected welding energy must match the requirements of the selected welding element. The energy of the arc melts the face of the welding element and the workpiece (see figure, **position 3**).

– At the end of the preset welding time, the stud is mechanically moved to the workpiece. On plunging into the weld pool, the two weld zones join and solidify. The contact of stud and workpiece extinguishes the arc in a short-circuit and the main current is switched off.

– The weld zone solidifies and cools down. The welding element is now welded to the workpiece over its entire cross-section of the welding element (see figure, **position 4**). As soon as the weld metal is cooled down, the welding gun can be carefully withdrawn from the welding element. When using shielding gas, the shielding gas flow is switched off with the withdrawal of the welding gun. If a ceramic ferrule is used, it can be removed by light hammer blows.

The welding range of drawn-arc stud welding is about 3 to 25 mm diameter when using mild steel/stainless steel. Welding elements with rectangular cross-section should not exceed a ratio length : width of about 5 : 1. All technical information and adjustment values are based on the use of welding elements which correspond with current standards.

©HBS Bolzenschweiss-Systeme GmbH & Co. KG

All rights reserved – Reprinting, in whole or in part, only with the approval of the manufacturer

Variants of drawn-arc stud welding

Item	Drawn arc stud welding with ceramic ferrule	Drawn arc stud welding with shielding gas	Short-cycle drawn arc stud welding with shielding gas
Diameter welding element d metric in mm (imperial)	3 - 25 (#4 or 12 gage to 1“)	3 - 12 (16) (#4 or 12 gage to 1/2“ (5/8“)), by using aluminium up to 12 mm/ 1/2“)	3 - 12 (#4 or 12 gage to 1/2“), by using brass and aluminium with shielding gas
Max. current I in A	3000	3000	2000
Welding time t in ms	100 - 2000	100 - 2000	10 - 100
Energy source	Welding rectifier, inverter	Welding rectifier, inverter	Welding rectifier, inverter
Weld pool protection	Ceramic ferrule CF	Shielding gas SG	Shielding gas SG or no protection NP
Material welding element (suitable for welding)	Mild steel, stainless steel	Mild steel, stainless steel, aluminium (up to 12 mm)	Mild steel, stainless steel, brass and aluminium with shielding gas
Workpiece surface	Metallic bright (rolling skin, rust film, welding primer)	Metallic bright (rolling skin, rust film, welding primer)	Metallic bright, galvanised (< 40 µm), slightly oiled
Min. thickness of workpiece	1/4 d min. 1 mm	1/8 d min. 1 mm	1/10 d approx. 0.7 mm
Adjustable parameters	Welding current I in A = 80 x d (up to 16 mm)	Welding current I in A = 80 x d (up to 16 mm)	Welding current I in A = 100 x d (up to 12 mm)
	Welding time t in ms = 20 x d (up to 12 mm)	Welding time t in ms = 20 x d (up to 12 mm)	Welding time
	Lift (arc length)	Lift (arc length)	Lift (arc length)
	Protrusion, immersion speed (plunge damper from 14 mm diameter)	Protrusion, immersion speed (plunge damper from 14 mm diameter)	Protrusion, immersion speed

All rights reserved – Reprinting, in whole or in part, only with the approval of the manufacturer

Drawn-Arc Stud Welding with Ceramic Ferrule

Drawn-arc stud welding with ceramic ferrule is used with welding elements of 3 to 25 mm diameter (preferably above 12 mm diameter) and with welding times of about 100 to 2 000 ms. It is generally suitable for all welding positions. When stud welding with ceramic ferrule, the welding position is PA (flat position). The major part of all applications applies to this procedure.

The ceramic ferrule (CF):

- prevents atmosphere from getting to the weld pool by a formation of metal vapor in the arc chamber
- stabilizes and concentrates the arc, thus decreasing the arc blow effect
- forms the melt under pressure to a weld collar and supports the weld pool on a vertical wall and overhead
- protects the welder from arc radiation and welding spatters

Normally, the ceramic ferrule is used for only one weld and is removed after solidification of the weld pool.

Standard welding elements and ceramic ferrules are described in EN ISO 13918. When using concrete anchors or shear connectors the front area can be plane constructed with a small pressed-in aluminium ball.

Studs with cone-shaped front area and aluminium ball are preferably used with ceramic ferrule.

©HBS Bolzenschweiss-Systeme GmbH & Co. KG

All rights reserved – Reprinting, in whole or in part, only with the approval of the manufacturer

Drawn-Arc Stud Welding with Shielding Gas

Drawn-arc stud welding with shielding gas is used with welding elements for a diameter range of 3 to 12 (16) mm and with welding times from 100 to 2000 ms. Principally, it is suitable for all welding positions, however, it is preferably used in flat position PA. With stud welding with shielding gas, the weld area is protected by shielding gas. The shielding gas, which is fed from outside through a gas control and an additional device, displaces the ambient atmosphere from the welding area and reduces considerably pore formation.

	Recommendation according	Recommendation according HBS
Mild steel / stainless steel	DIN EN ISO 14175-M21: (82 % Ar / 18 % CO_2)	90 % Ar / 10 % CO_2 *) 92 % Ar / 8 % CO_2 *)
Aluminium and aluminium alloys	DIN EN ISO 14175-I1 DIN EN ISO 14175-I3	85 % Ar / 15 % He 70 % Ar / 30 % He **)

*) As a result of the higher amount of CO_2 the surface tension of the weld pool is reduced, which may lead to increased spatter formation.

**) For larger plate thicknesses the helium content may be increased.

The shielding gas influences

– the arc and the melting behavior of welding element and workpiece,

– the development of the weld collar and the penetration shape via the surface tension.

With stud welding with shielding gas, the shape of the weld collar is not reproducible, as the shielding gas has no forming effects on the melt – different from a ceramic ferrule. And so an additional ceramic ferrule may be used in special cases.

The standard welding elements for drawn-arc stud welding with shielding gas are described in EN ISO 13918. Welding elements with cone-shaped front area and without an aluminum ball are preferably used.

All rights reserved – Reprinting, in whole or in part, only with the approval of the manufacturer

With shielding gas, you should only weld in position PA (flat position) because due to gravity, the shielding gas cannot prevent flow of the molten metal.

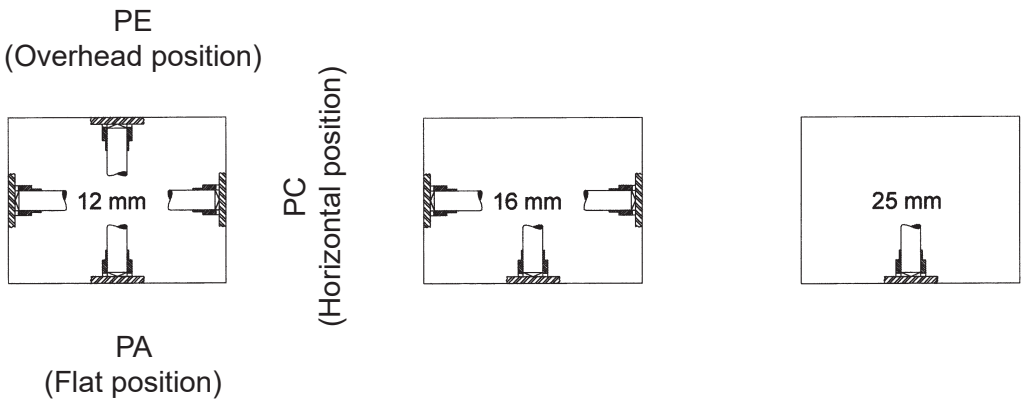

Short-Cycle Drawn-Arc Stud Welding with Shielding Gas

Short-cycle drawn-arc welding with shielding gas is used for welding elements within a diameter range of 3 to 12 mm (nominal diameter without flange) and welding times between 10 and 100 ms

Due to the short welding times, the energy input and the weld pool are so small that also welding elements up to 12 mm diameter can be welded on thin workpieces.

Normally, welding elements with flange (according to current standards) are used, which forms a larger welding area compared with the shaft diameter. In this way, higher tensional forces than in the stud shaft can be transmitted in spite of some pores in the weld zone. To minimize pore formation, the use of shielding gas for stud diameters upwards of 8 mm is recommended.

©HBS Bolzenschweiss-Systeme GmbH & Co. KG

All rights reserved – Reprinting, in whole or in part, only with the approval of the manufacturer

10 Preparing Workplace and Welding Process

Danger from fumes and airborne particulates

- Switch on the welding fume extractor at the workplace.
- Ensure that the room is well ventilated.
- Never weld in rooms with a ceiling height of less than 3 m.
- Observe furthermore your working instructions and the accident prevention regulations.

This will help to avoid health damage due to fumes and airborne particulates.

Danger from fire and explosion

- Remove all inflammable materials and liquids from your working area.
- Ensure that there are no explosive materials in your working area.
- Ensure that an approved fire extinguisher is available at the workplace.

Danger from tripping and falling

- Lay cables and connecting leads in such a way that they are protected against damage and
- that you or third parties cannot trip over them or fall.

Warning of weld spatter

- Ensure that there is no equipment or apparatus in the working area that could be damaged by weld spatter.
- Remove if necessary.

All rights reserved – Reprinting, in whole or in part, only with the approval of the manufacturer

Warning of electromagnetic fields

- Ensure that there is no equipment or apparatus in the working area that could be damaged by magnetic fields.
- Remove if necessary.

Danger!

- Ensure that there is a free circulation of air through the housing of the stud welding unit.
- Always place the stud welding unit on a stable, level and clean surface.
- Check the condition of all cables and cable connections.
- Have defective cables or their connections immediately repaired or replaced by a qualified electrician.

10.1 Preparing Surfaces

- Remove
  - Paint, oil and other impurities,
  - Rust,
  - Non-conductive coatings (of surface-coated materials)

from the welding surface and the contact points of the ground clamps.

This ensures a high strength of the welded joints.

- **Weld the welding element only to a flat surface.**
- Ask your application consultant at HBS about welded joints on tubes and riffle plates (*see page 2*).

©HBS Bolzenschweiss-Systeme GmbH & Co. KG

All rights reserved – Reprinting, in whole or in part, only with the approval of the manufacturer

10.2 Checking the Stud Welding Gun

- Always check the operating manual of your stud welding gun to see whether it may be used with this stud welding unit.

This stud welding unit can only be used with the HBS stud welding guns A 12, A 12-FL, A 16, CA 08 and PAH-1.

- Check the chuck of your stud welding gun for proper fit and ensure it is tightened.
- Check the bellows of your stud welding gun for damage.
- Check if spring force and lift are set according to the welding parameter table in the operating manual of the stud welding gun.

- **Refer here to the operating manual of your stud welding gun.**

10.3 Checking the Stud Welding Head

- Always check the operating manual of your stud welding head to see whether it may be used with this stud welding unit.

This stud welding unit can only be used with the HBS stud welding heads KAH 412 and KAH 412 LA.

- Check the chuck of your stud welding head for proper fit and ensure it is tightened.
- Check the bellows of your stud welding head for damage.
- Check if spring force and lift are set according to the welding parameter table in the operating manual of the stud welding head.
- Check whether the welding head equipment has been selected correctly according to the welding task.

- **Refer here to the operating manual of your stud welding head.**

10.4 Checking the Automatic Stud Feeder

- Always check the operating manual of your automatic stud feeder to see whether it may be used with this stud welding unit.

This stud welding unit can only be used with the fully automatic stud feeder VBZ-3.

- **Refer here to the operating manual of your automatic stud feeder.**

All rights reserved – Reprinting, in whole or in part, only with the approval of the manufacturer

11 Connection

- **First prepare your workplace.**
- Read and observe here *point 10 "Preparing Workplace and Welding Process"*.

Electric shock hazard

- Leave the stud welding unit switched off during connection of the connecting leads.

In this way you can avoid any unintentional starting of the welding process.

- **Secure the cables.**

Strong magnetic fields are generated during the welding process that can lead to whipping of the cables. This can cause the cables to come out of the plug sockets.

©HBS Bolzenschweiss-Systeme GmbH & Co. KG
All rights reserved – Reprinting, in whole or in part, only with the approval of the manufacturer

11.1 Connecting the Welding Gun to the Stud Welding Unit

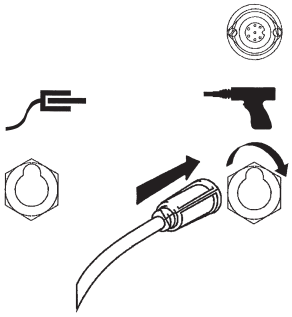

Connect the welding current cable

- Only now plug the welding current cable into the corresponding socket of the stud welding unit.
- Press in the plug and turn it firmly clockwise (to the right).

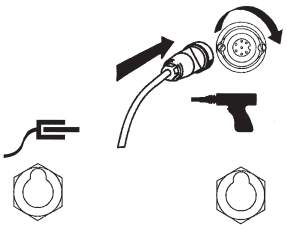

Connect the control cable

- Plug the control cable in the connector of the stud welding unit.
- Twist the retaining nut of the control cable connector clockwise.

Only loosely made connections will result in damage to the plug connectors.

- Therefore always check that the plug connector is firmly inserted.

This prevents a poor contact and hence overheating of the plug connectors.

11.2 Connecting the Welding Head to the Stud Welding Unit

- Connect the welding current cable and the control cable.
- Proceed as described in section „*11.1 Connecting the Welding Gun to the Stud Welding Unit*“.

Only loosely made connections will result in damage to the plug connectors.

- Therefore always check that the plug connector is firmly inserted.

This prevents a poor contact and hence overheating of the plug connectors.

All rights reserved – Reprinting, in whole or in part, only with the approval of the manufacturer

11.3 Connecting the Fully Automatic Stud Feeder to the Stud Welding Unit

◆ Connect the control socket of the feeding unit (front side) to the control socket of the stud welding unit (rear side):

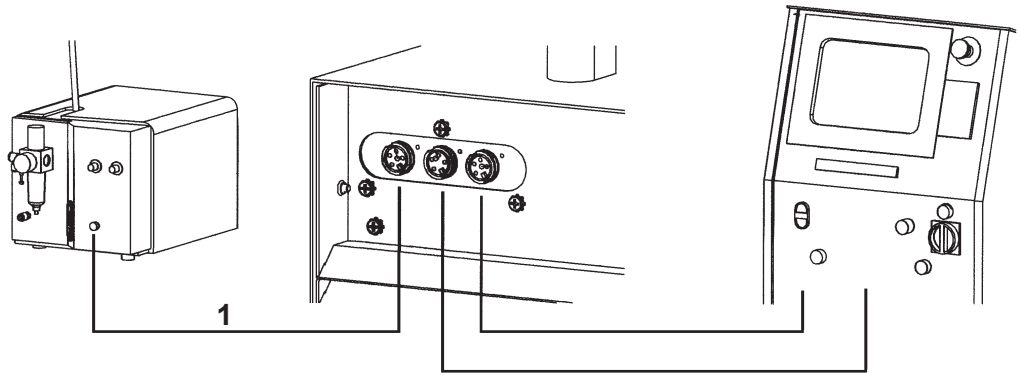

Feeding unit External control

1 - VBZ connection 5 poles

11.4 Shielding Gas Connection

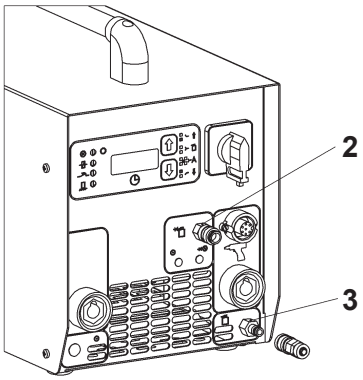

2 - Gas outlet

3 - Gas inlet shielding gas bottle

◆ Connect the gas hose of the shielding gas bottle to the gas inlet of the stud welding unit.

◆ Connect the gas hose of the welding gun to the gas outlet.

©HBS Bolzenschweiss-Systeme GmbH & Co. KG

All rights reserved – Reprinting, in whole or in part, only with the approval of the manufacturer

◆ Set the flow meter of the shielding gas bottle to 8 - 16 liters/min.

Minimum flow rate for stud welding with shielded gas is 8 l/min

For stud welding a shielding gas mixture according DIN EN ISO 14175 is used.

◆ Please refer to *chapter 9* for more detailed information.

◆ **You must not put the air hose into the gas valve of the stud welding unit!**

The valve would be destroyed.

If the conduits are wrongly connected, feeding and welding malfunctions will occur.

Danger from incorrect securing and handling of shielding gas cylinders

Incorrect handling and insufficient securing of shielding gas cylinders can result in severe injury!

◆ Follow the instructions from the gas manufacturer and given in the relevant compressed gas regulation.

◆ Place the shielding gas cylinder in the cylinder holder intended for this purpose.

◆ Secure the shielding gas cylinder properly!

Do not secure the cylinder by its valve!

◆ Take measures to prevent the shielding gas cylinder from heating up.

All rights reserved – Reprinting, in whole or in part, only with the approval of the manufacturer

11.5 Connecting the Compressed Air Connection for Automatic Stud Feeding

In automatic mode the welding gun PAH-1 or the welding heads KAH 412 and KAH 412 LA can be used to weld welding elements from dia 3 up to 8 mm.

You can insert the welding elements into the welding gun by hand (semiautomatic) or work with a fully automatic stud feeder.

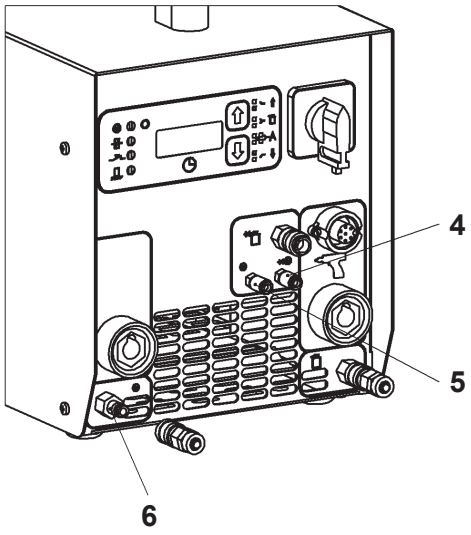

4 - air outlet black

5 - air outlet blue

6 - connector compressed air inlet

STOP

- **You must not put the air hose into the gas valve of the stud welding unit!**

The valve would be destroyed.

STOP

If the conduits are wrongly connected, feeding and welding malfunctions will occur.

©HBS Bolzenschweiss-Systeme GmbH & Co. KG

All rights reserved – Reprinting, in whole or in part, only with the approval of the manufacturer

Connecting the fully automatic stud feeder VBZ-3

- If you use the automatic stud feeder, plug the air hose into the compressed air supply (6 bar, 800 l/min) of the feeding unit VBZ-3.
- Connect the compressed air outlet of the feeding unit to the compressed air inlet of the stud welding unit.

You can set the operating pressure of max. 6 bars with the pressure reducing valve of the feeding unit. In the filter unit, the compressed air is cleaned and drained.

- **You must not put the air hose into the gas valve of the stud welding unit!**

  The valve would be destroyed.

Connecting the automatic welding gun PAH-1

- Plug the air connectors of the welding gun into the air outlet bushes at the front of the stud welding unit.
- Observe the color markings:

black	=	**switched air** (during stud feeding time)
blue	=	**continuous air**, for pressing the stud into the chuck and as a stop

The stud welding unit controls the air between these two bushes.

If the conduits are wrongly connected, feeding and welding malfunctions will occur.

All rights reserved – Reprinting, in whole or in part, only with the approval of the manufacturer

11.6 Connecting the Ground Cable

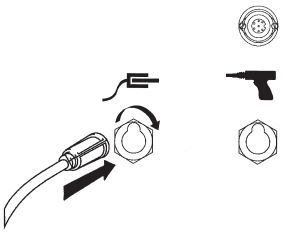

Connect the ground cable

- Plug the ground cable into the corresponding socket of the stud welding unit.
- Press in the plug and turn it firmly clockwise (to the right).

Only loosely made connections will result in damage to the plug connectors.

- Therefore always check that the plug connector is firmly inserted.

This prevents a poor contact and hence overheating of the plug connectors.

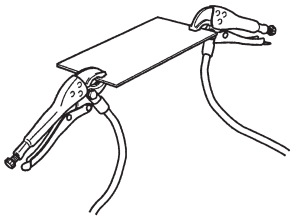

Connect the ground clamps

- Remove rust, paint and dirt from the points on the workpiece to which you wish to connect the ground clamps.
- Attach the ground clamps to the workpiece as tightly as possible.
- Pay attention to a good contact and symmetrical connection.

The welding point should be in the middle between the two ground clamps.

©HBS Bolzenschweiss-Systeme GmbH & Co. KG

All rights reserved – Reprinting, in whole or in part, only with the approval of the manufacturer

11.7 Connecting the Stud Welding Unit to the Mains Supply

Electric shock hazard

- Have an electrician check whether the plug socket to which you intended to connect the stud welding unit is correctly earthed.
- Connect the stud welding unit only to a mains supply with the same mains voltage as that indicated on the type plate.
- Compare the current consumption indicated on the type plate with the fuse of your mains power supply.
- Check that the stud welding unit is switched off.
- Only now insert the plug into the plug socket.

All rights reserved – Reprinting, in whole or in part, only with the approval of the manufacturer

11.8 Integrate the Stud Welding Unit into a CNC System

- Connect the control socket of the feeding unit (front side) to the control socket of the stud welding unit (rear side).
- Proceed as described in section *11.3 Connecting the Fully Automatic Stud Feeder to the Stud Welding Unit*.
- Then connect the control cables 7 and 8 as follows:

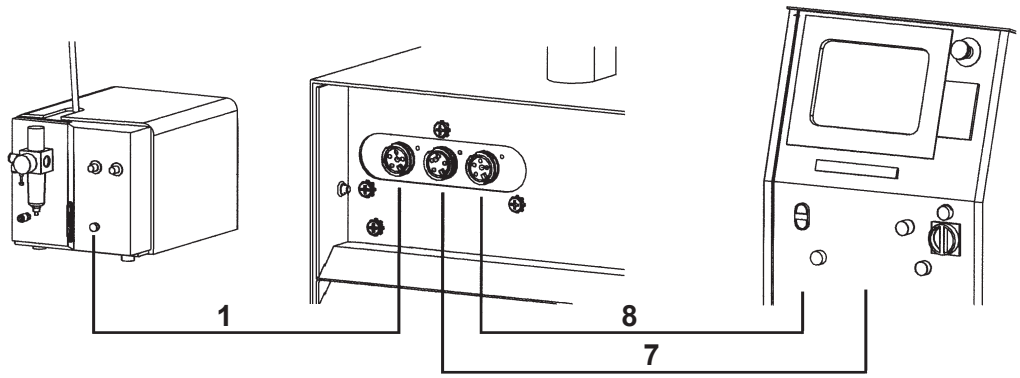

Feeding unit External control

1 - VBZ connection 5 poles

7 - External welding start 4 poles

8 - Contact socket 3 poles

©HBS Bolzenschweiss-Systeme GmbH & Co. KG

All rights reserved – Reprinting, in whole or in part, only with the approval of the manufacturer

Automatic Interfaces ARC 800

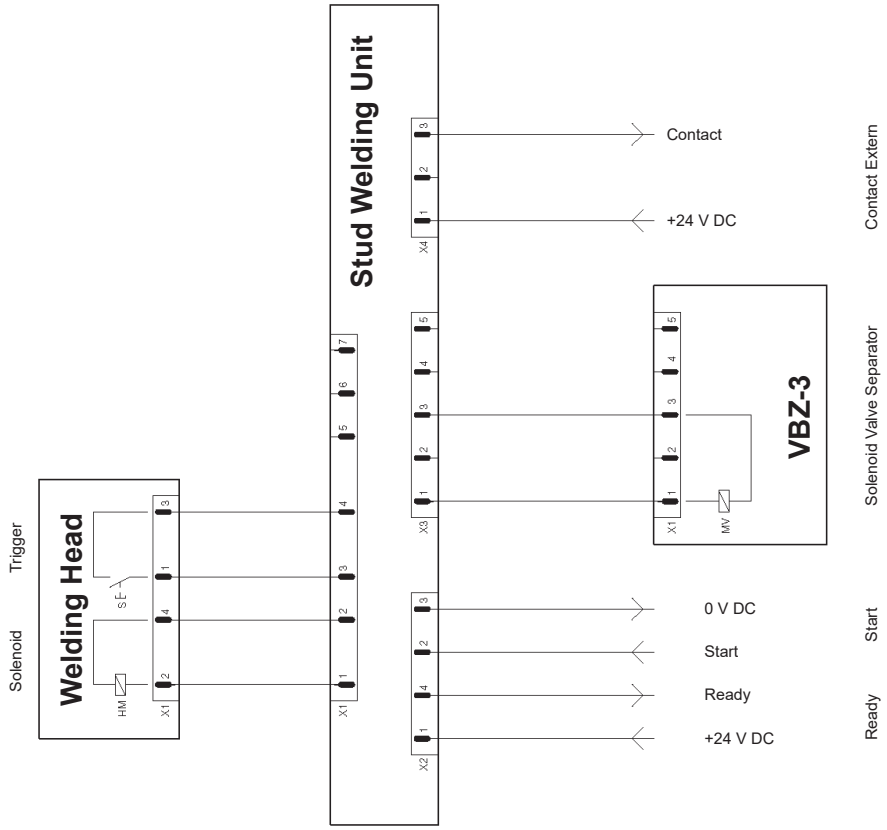

All rights reserved – Reprinting, in whole or in part, only with the approval of the manufacturer

11.8.1 External Welding Start

A welding start can also be provided with the welding gun control plug at the front side of the stud welding unit (pins 3; 4).

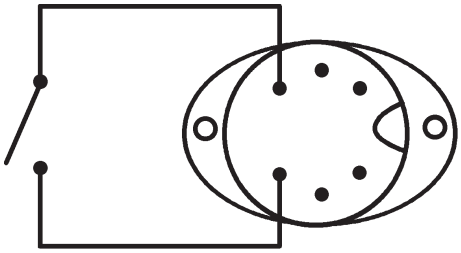

To start welding, you must shortcircuiting pin 3 and 4 for at least 100 ms.

©HBS Bolzenschweiss-Systeme GmbH & Co. KG

All rights reserved – Reprinting, in whole or in part, only with the approval of the manufacturer

Charging Supervision (Ready)

For best control of time sequence of CNC machines, a charging supervision is provided. As soon as the stud welding unit is ready for welding, the transistor is switched on (control socket 4 poles, pins 1; 4)

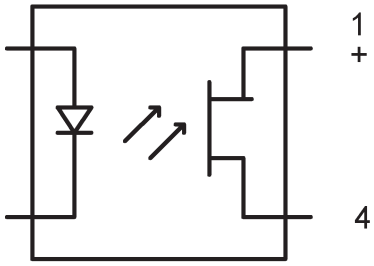

1 - Input

4 - Output

Operating voltage 24 V DC

Current capacity max. 50 mA

11.8.2 Contact

For best control of time sequence of CNC machines, an external contact inquiry between work piece and welding head is provided. As soon as a contact is recognized, the transistor is swiched on (control socket 3 poles, pins 1; 3).

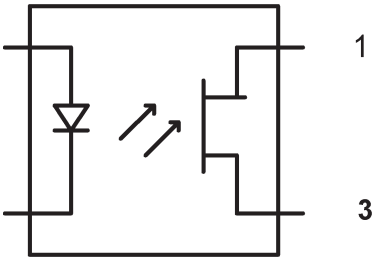

1 - Input

3 - Output

Operating voltage 24 V DC

Current capacity max. 50 mA

◆ **Refer here to the operating manual of your welding head.**

All rights reserved – Reprinting, in whole or in part, only with the approval of the manufacturer

12 Welding

- **First connect up the stud welding unit.**
- Read and observe here *point 11 „Connection“*.

Life-threatening danger for wearers of active implanted cardiac devices

Danger for workers at particular risk within the meaning of the EMF directive

Persons at particular risk within the meaning of the EMF directive are:

– Workers with active implanted medical devices
– Workers with passive implanted medical devices that contain metal
– Workers with medical devices worn on the body
– Pregnant workers.

- Never operate the stud welding machine if you are among the group of workers at particular risk within the meaning of the EMF directive.
- In this case, never remain in the vicinity of the stud welding machine during welding.
- Never operate the stud welding machine if persons are located nearby who are among the group of workers at particular risk within the meaning of the EMF directive.

Strong electromagnetic fields are produced in the vicinity of the stud welding machine during welding. These fields can adversely affect the function of medical devices as well as the course of a pregnancy.

12.1 Switch on the Stud Welding Unit

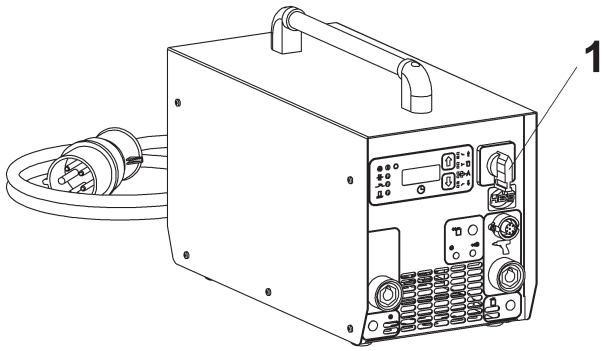

1 - Mains switch

- Only now switch on the stud welding unit at the **mains switch (1)**.

©HBS Bolzenschweiss-Systeme GmbH & Co. KG
All rights reserved – Reprinting, in whole or in part, only with the approval of the manufacturer

12.2 Determining the Welding Time

Determination of welding time at the stud welding unit using the arrow keys depends i.a. on

– the welding gun used,

– the material of the welding element,

– the diameter of the welding element,

– the material of the workpiece.

◆ Determine the welding time to be set at the stud welding unit using the following tables.

☞ **The figures in these table are indicative values and must be checked by means of a test welding on the original material with the same properties as the original workpiece.**

☞ When welding with shielding gas, a 10 % longer time is normally selected.

When welding alloyed steel, a 10 % lower current is normally selected.

The given values apply to weldings in the welding position PA. The welding time shall be reduced for welding in the welding position PC.

In the case of short cycle stud welding, the welding time is less than 100 ms. It depends not only on the stud diameter, but also on the available current intensity (I[A] = min. 100 x Ø (mm)).

The welding time should be as short as possible in the case of welding without weld pool protection.

Welding energy is only selected by welding time.

All rights reserved – Reprinting, in whole or in part, only with the approval of the manufacturer

Determining the Welding Time

Welding elements Material: 4.8 (suitable for welding) [2]		Diameter of welding elements				Welding time [1] [2] ARC 800 in ms
		metric		imperial (US)		
		Stud diameter in mm	Eff. diameter in mm	Stud diameter in inches	Eff. diameter in inches	
Material of workpiece: Mild steel (suitable for welding) [2]						
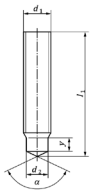		Ø d_1	Ø d_2	Ø d_1	Ø d_2	t
	RD (MR)	M6	4.7	1/4	0.185	45
	RD (MR)	M8	6.2	5/16	0.244	80
	RD (MR)	M10	7.9	3/8	0.311	130
	RD (MR)	M12	9.5	1/2	0.374	180
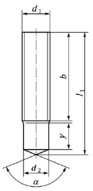		Ø d_1	Ø d_2	Ø d_1	Ø d_2	t
	FD/PD/MD (DD)	M6	5.35	1/4	0.211	60
	FD/PD/MD (DD)	M8	7.19	5/16	0.283	100
	FD/PD/MD (DD)	M10	9.03	3/8	0.356	165
	FD/PD/MD (DD)	M12	10.86	1/2	0.428	250
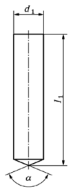		Ø d_1		Ø d_1		t
	UD/ND	3		#4 / 12 gage		20
	UD/ND	4		#8		35
	UD/ND	5		#10 / 3/16		50
	UD	6		1/4		75
	UD	8		5/16		130
	UD	10		7/16		200
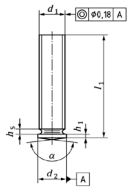		Ø d_1	Ø d_2	Ø d_1	Ø d_2	t
	PS	M3	4	1/8	0.157	35
	PS	M4	5	5/32	0.197	50
	PS	M5	6	3/16	0.236	75
	PS	M6	7	1/4	0.276	100
	PS	M8	9	5/16	0.354	170
	PS	M10	11	3/8	0.433	250

[1] to be checked by test weldings

[2] When using alloyed steels, the welding energy (welding time) must be reduced by about 10 %.

©HBS Bolzenschweiss-Systeme GmbH & Co. KG

All rights reserved – Reprinting, in whole or in part, only with the approval of the manufacturer

12.3 Checking Shielding Gas Flow Rate

Minimum flow rate for stud welding with shielding gas is approx. 8 l/min.

- Check that the stud welding unit is switched on.
- Switch on the "Shielding gas" option on the stud welding unit.
- Actuate the welding gun button without placing the stud welding gun on the workpiece (= "air shot").

The flow meter displays the amount of shielding gas flowing in l/min.

- Set the flow rate according to your welding task.

All rights reserved – Reprinting, in whole or in part, only with the approval of the manufacturer

12.4 Setting the Welding Parameters

Adjusting the Welding Time

- **First determine the necessary welding time.**
- Read and observe here *Point 12.2 „Determining the Welding Time“*.

- Only now set the necessary welding time with the arrow buttons.

Adjusting the Gas Pre-Flow Time

If working with shielding gas, you have to set the gas pre-flow time. Adjust at the display, how long the shielding gas should flow before the welding process starts. The gas flows automatically until the stud welding gun is removed from the joined welding element.

- Adjust the flow meter at the gas bottle from 6 to 10 liters/min, depending on the size of the gas shroud.
- Press simultaneously the two arrow keys at the stud welding unit ( ) for about one second.
- The display shows 1 ... 00.
- Now set the gas pre-flow time with the two arrow keys (longer – shorter).

  01 corresponds to 100 ms, 10 to 1 s (adjustment range 0 to 2 s)

Depending on the shielding gas tube, gas infeed, cycle frequency, etc., we recommend a **gas pre-flow time of at least one second for a gas flow rate of 8 litres/min**.

Gas flow rates that are too high may lead to turbulence in the shielding gas or may blow out the light arc. Insufficient gas pre-flow times may inhibit the shielding function of the gas. Both lead to poor welding results.

©HBS Bolzenschweiss-Systeme GmbH & Co. KG
All rights reserved – Reprinting, in whole or in part, only with the approval of the manufacturer

◆ You return to the display of welding time by simultaneously pressing the two arrow keys (⬆⬇) twice for about one second.

☞ ◆ **If you are working without shielding gas, set the gas pre-flow time 1 ... 00.**

The gas valve remains closed during welding.

Adjusting the Stud Feeding Time (Blow Time)

If you are working in automatic mode, you must adjust the blow time. Use the display to set the feeding time (blow time).

◆ Adjust the selected compressed air supply to 6 bars.

◆ Press thrice (simultaneously) the two arrow keys ⬆⬇ for about one second.

◆ The displays shows 2 ... 00.

◆ Set the blow time with the two arrow keys (⬆ longer – ⬇ shorter).

01 corresponds to 100 ms, 10 corresponds to 1 s (adjustment range 0 to 2 s)

◆ You return to the welding menu by once more pressing both arrow keys (⬆ longer – ⬇ shorter) simultaneously.

☞ ◆ **If you do not work in automatic mode, set the blow time to zero.**

The air valve remains closed during welding.

All rights reserved – Reprinting, in whole or in part, only with the approval of the manufacturer

12.5 Performing the Welding Process

- **First set the necessary welding parameters.**
- Read and observe here point *12.4 „Setting the Welding Parameters“*.

Electric shock and light arc hazard

- Never touch the welding elements, chuck, retaining nut or electrically conductive parts in their vicinity during the welding process.

These parts are live.

- Never wear metal jewellery, even a wristwatch, on your body during the welding process.

This will help to avoid injuries and damage due to electric power or electromagnetic fields.

Electric shock and light arc hazard

- Stand on an insulated mat if you have to weld under the following conditions:

– In confined spaces with electrically conductive walls
– Under cramped conditions between or against electrically conductive parts
– Where there is limited mobility on electrically conductive parts
– In damp, wet or hot rooms.

©HBS Bolzenschweiss-Systeme GmbH & Co. KG
All rights reserved – Reprinting, in whole or in part, only with the approval of the manufacturer

Danger of deflagration of explosive gases and substances

- Never weld in rooms with an explosion hazard.
- Never weld on vessels containing or that have contained substances
  - which are inflammable or promote combustion,
  - which may create health-endangering gases, fumes or airborne particulates,
  - or which could cause explosions.

Such work may only be carried out by welding specialists.

- Do not carry out such work if you have not been specially trained for it.

Risk of fire and burns due to glowing weld spatter

- Wear your personal protective equipment and
- your safety goggles with sight glass of protection class 2.
- Wear a protective helmet when welding over head.
- Remove all inflammable materials and liquids from the vicinity of the place of work before starting welding.
- Ensure that an approved fire extinguisher is available at the place of work.
- Observe furthermore your working instructions and the accident prevention regulations.

Glowing hot weld and liquid spatter occur during welding.

All rights reserved – Reprinting, in whole or in part, only with the approval of the manufacturer

Danger due to noise

- Wear your ear protection during welding.
- Observe furthermore your working instructions and the accident preventi-on regulations.
- Inform colleagues working in the immediate vicinity accordingly before starting work.

A > 90 dB (A) bang can occur during the welding process.

- Ensure that the welding gun has been prepared in accordance with the corresponding operating manual.

- Check whether a welding element has been inserted into the welding gun.
- Insert a welding element, if necessary.

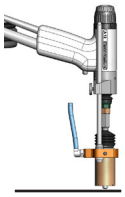

- Place the welding gun perpendicularly onto the workpiece as soon as the stud welding unit is ready for the welding process.
- Press the welding gun firmly with both hands against the workpiece until the welding gun attachment (spacer) is resting uniformly on the workpie-ce.

- Hold the welding gun firmly, steady and straight.
- Ensure that you do not touch any metal parts of the welding gun.
- Only now should you press the button of the welding gun.

The welding process is started.

- **Always pull the welding gun perpendicularly away from the welding element after the welding process**.

If you pull the welding gun away at an angle, you will strain the chuck and shorten its service life.

Risk of burns

The gun head becomes very hot during the welding process. The same applies to the welded element and the workpiece.

- Wear your proper protective clothing.

©HBS Bolzenschweiss-Systeme GmbH & Co. KG
All rights reserved – Reprinting, in whole or in part, only with the approval of the manufacturer

☞

- **Use only welding elements of one batch.**
- Pay strict attention not to mix welding elements from different batches.
- Carry out test welds again after a batch change.

Even the slightest changes to the geometry, in particular to the tip of the welding elements require different settings for the welding process.

☞

- Now check the quality of the welded joint before inserting a new welding element and repeating the welding process.
- Work in accordance with the following *point 13*.

All rights reserved – Reprinting, in whole or in part, only with the approval of the manufacturer

13 Checking the Quality of the Weld

You can check the quality of the weld by means of a visual inspection and a bending test.

The number and type or method of the tests to be performed and the acceptance criteria are defined in respective standards for quality demands.

13.1 Carrying out Visual Inspection

◆ Carry out a visual inspection on all welding elements.

Visual Inspection			
Condition		Possible cause	Corrective actions
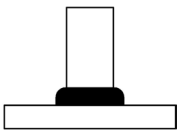	Collar regular, bright and complete. Lengths after weld within tolerances	Correct parameters	none
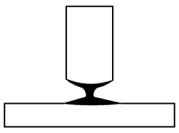	Contraction of weld collar Welding element too long	Plunging depth or lift too low Weld power too high Ceramic ring not centered correctly Plunge rate too high	Increase plunging depth, check lift and centering of the ceramic ring Reduce current and/or time Check centering Adjust plunge and/or gun dumper
	Weakly developed, uneven weld collar with mat surface Welding element too long	Weld power too low Ceramic ferrule is moist Lift too low	Increase current and/or time Dry out ferrules in oven Increase lift
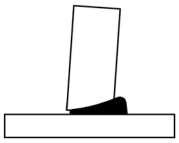	Collar off centre Undercut	Effect of arc blow Ceramic ferrule incorrectly centred	See arc blow effect Check centring
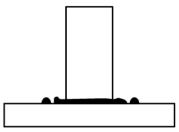	Weld collar low, shiny surface with many spatters Welding element too short	Weld energy too high Plunging speed too high	Decrease current and/or time Adjust plunging depth and/or damping factor

©HBS Bolzenschweiss-Systeme GmbH & Co. KG

All rights reserved – Reprinting, in whole or in part, only with the approval of the manufacturer

13.2 Carrying out Bending Test

You can purchase from HBS a bending device with inserts for various diameters of the welding elements.

The bending test serves as an easy work sample and as a check for the selected welding parameters. The welded joint is stressed by bending in a non-defined way.

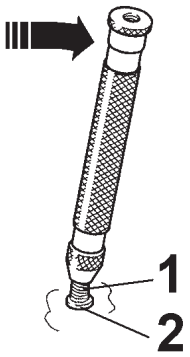

1 - Welding element

2 - Welded joint

◆ Place the bending device on the **welding element (1)** and

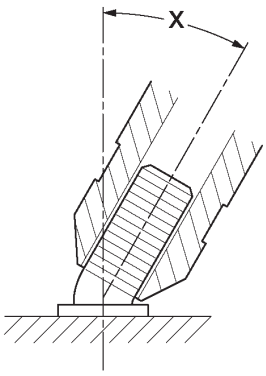

◆ bend the **welding element (1)** with the bending device once by 60° in any direction.

The bending test is passed if a crack or a fracture of the welded zone does not occur.

☞

◆ **Further tests should be conducted if the connection fails in the weld area.**

◆ In this case, **bend** the welding element exactly in the opposite direction by 60° towards the failing seam.

For a **non-destructive strength test** of the welding elements HBS offers a **torque bending test device** in accordance with DIN EN ISO 14555 (Order No. 92-40-135A).

All rights reserved – Reprinting, in whole or in part, only with the approval of the manufacturer

☞

◆ You don’t need to test all studs.

It is sufficient to carry out stud tests on several production samples that are picked at random.

Bending Test			
Type of fracture		Possible cause	Corrective actions
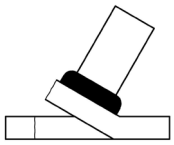	Tearing of parent material	Correct parameters	none
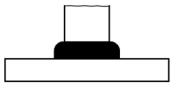	Fracture above collar after sufficient deformation	Correct parameters	none
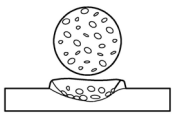	Fracture within the weld. High porosity	Weld energy too low Unclean surface Material not suitable for stud welding	Increase current and/or welding time Clean the surface Select suitable material
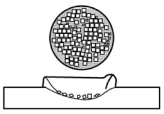	Fracture of weld Bright appearance	Welding time too low.	Increase welding time

If the strength of the joint is inadequate, then:

◆ check the setting of the stud welding unit.

◆ check whether the surface of welding element and base material are clean and electrically conductive.

They must be free from scale, oil, paint, oxide layers.

◆ Grind off hardened workpiece surfaces (e.g. roll hardening).

◆ Check the piston of the welding gun for ease of movement.

©HBS Bolzenschweiss-Systeme GmbH & Co. KG

All rights reserved – Reprinting, in whole or in part, only with the approval of the manufacturer

13.3 Optimisation of Welding Parameters

- **As first step, conduct the tests outlined under points 13.1 and 13.2.**
- As second step optimise the welding parameters according to the table under *point 12.2 „Determining the Welding Time“*.

- Optimise the welding parameters of the stud welding unit.
- Check the settings of the welding gun.
- If necessary re-adjust the lift and spring pressure.

- **Refer here to the operating manual of your welding gun.**

All rights reserved – Reprinting, in whole or in part, only with the approval of the manufacturer

13.4 Blowing Effect and Remedies

With asymmetric ground connections, different material distributions or when welding at the edge of a workpiece a "blowing effect" can occur. This is an undesirable deflection of the electric arc. This results in uneven melting of the stud material, in increased poring and undercuts in the welding area.

The blowing effect is proportional to the current amperage and can be influenced by symmetrical connection of the ground terminals, by connecting compensating grounds or (on welding guns with external welding cable) by turning the welding gun about its vertical axis.

Blowing effect	
Cause	Remedy
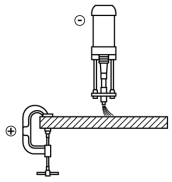	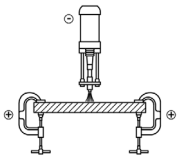
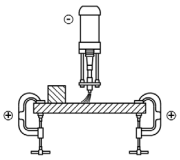	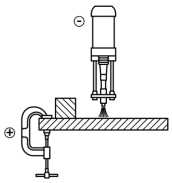
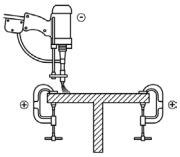	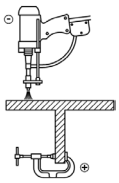

©HBS Bolzenschweiss-Systeme GmbH & Co. KG

All rights reserved – Reprinting, in whole or in part, only with the approval of the manufacturer

14 Troubleshooting

Danger from insufficiently qualified operating personnel

- Carry out only the work described here on your stud welding unit or stud welding gun.
- Repairs may only be carried out by appropriately qualified personnel.
- Inform your dealer or your maintenance department.

Fault	Possible cause	Fault localisation	Fault remedy	Performance
Mains switch does not rest in position 1	Mains switch defective	Check mains switch*)	Replace mains switch*)	Qualified specialists
	Fuse F4 1 AF for mains switch defective	Check voltage supply of mains switch*)	Replace fuse F4 1 AF*)	Qualified specialists
	Mains cable defective	Check mains cable for breaks*)	Replace mains cable*)	Qualified specialists
No LED display at the front	Fuse F5 1 AF defective	Check fuse F5 1 AF*)	Replace fuse F5 1 AF*)	Qualified specialists
No display	No ground connection	Check ground connection on workpiece	Tighten ground connec-tion properly	Trained personnel
	Gun not connected	Check gun connection	Connect gun properly	Trained personnel
	Transition resistance (between stud and workpiece) too high	Check material surface	Clean or grind material surface	Trained personnel
	Ground cable broken	Check ground cable*)	Replace ground cable*)	Qualified specialists
	Welding gun cable broken	Check welding gun cable*)	Replace welding gun cable*)	Qualified specialists
No display	Defective connecting line of welding gun	Check function of connec-ting line*)	Replace connecting line*)	Qualified specialists
	Welding gun trigger button defective	Check control cable for electrical flow with triggered start button*)	Replace welding gun trigger button*)	Qualified specialists
	Control cable broken	Check control cable for electrical flow*)	Replace control cable*)	Qualified specialists

All rights reserved – Reprinting, in whole or in part, only with the approval of the manufacturer

Fault	Possible cause	Fault localisation	Fault remedy	Performance
Continuously red ⊗ Display: 8 .. 2	Welding sequence too fast	Stud welding unit resets automatically	Let switched on stud welding unit cool down	Trained personnel
Gun does not lift, in spite of , and	No lift adjusted	Check settings of welding gun	Modify set parameters	Trained personnel
	Short circuit of solenoid circuit of the welding gun	Check resistance value at control cable connector (18 Ω to 22 Ω) between Pin 1 and Pin 2*)	Replace control cable connector, control cable and solenoid*)	Qualified specialists
	Solenoid defective	Check solenoid (18 Ω to 22 Ω)*)	Replace solenoid*)	Qualified specialists
	Fuse F3 4 AF defective	Check fuse F3 4 AF*)	Replace fuse F3 4 AF*)	Qualified specialists
Lifting impossible	Solenoid circuit inter-rupted	Check resistance value at control cable plug (18 Ω to 22 Ω) between Pin 1 and Pin 2*)	Replace solenoid or control line*)	Qualified specialists
No shielding gas	Shielding gas not connected	Check shielding gas connection	Connect shielding gas	Trained personnel
	Shielding gas control not enabled	Check gas control for activity	Switch on shielding gas control	Trained personnel
	Shielding gas valve defective	Check shielding gas valve*)	Replace shielding gas valve*)	Qualified specialists
No automatic stud feeding	Compressed air not connected	Check compressed air connection	Connect compressed air	Trained personnel
	Compressed air control not enabled	Check compressed air control for activity	Switch on compressed air control	Trained personnel
	Compressed air valve defective	Check compressed air valve*)	Replace compressed air valve*)	Qualified specialists

STOP

Work marked with *) may only be carried out by qualified electricians!

- Please contact our Service department if none of the measures described remedies the situation.
- Please use the form „Service & Support“ in the annex to send in the stud welding unit.

©HBS Bolzenschweiss-Systeme GmbH & Co. KG

All rights reserved – Reprinting, in whole or in part, only with the approval of the manufacturer

15 Shutting Down

- Switch off the stud welding unit.
- Pull out the mains plug.
- Disconnect the control cable and welding cables from the stud welding unit.
- Protect the stud welding unit and its components against the ingress of liquids and foreign matter.

All rights reserved – Reprinting, in whole or in part, only with the approval of the manufacturer

16 Maintenance and Care

Electric shock hazard

- Always switch off the stud welding unit before starting maintenance and care work.
- Pull out the mains plug.

Danger from insufficiently qualified operating personnel

- Carry out only the work described here on your stud welding unit.
- Repairs may only be carried out by appropriately qualified personnel.
- Inform your dealer or your maintenance department.

16.1 Cleaning

- Clean the surface of the stud welding unit with a slightly damp cloth, when necessary.
- Add a little household detergent to the cleaning water.

- **Do not use solvents for cleaning.**

These can damage the surface of your stud welding unit.

The inside of the stud welding unit must be cleaned at least every three months.

- Inform your dealer or your maintenance department.

©HBS Bolzenschweiss-Systeme GmbH & Co. KG
All rights reserved – Reprinting, in whole or in part, only with the approval of the manufacturer

16.2 Inspection and Tests

- **Inspect the condition of the mains cable.**
- Inform your dealer or maintenance department if you discover any damage.

- Check whether the readings on the display of the stud welling unit are still legible before starting work.
- Clean display and control panel in the event of soiling.

- Replace any removed or damaged signs:

Before opening machine disconnect mains

Observe the operating manual

Warning of electric shock hazard

☞ We recommend that the stud welding unit be subjected to an annual periodic inspection in compliance with the standard IEC 60974-4 “Periodic inspection and testing”.

Please contact your customer advisor for further information.

All rights reserved – Reprinting, in whole or in part, only with the approval of the manufacturers

17 Storage

- Store the stud welding unit in a safe and dust-free location when not in use.
- Protect the stud welding unit from moisture and metallic contamination.

- Store the stud welding unit only under the following ambient conditions.

Storage temperature:

23 °F to 122 °F (-5 °C to +50 °C)

Relative humidity:

0 % - 50 % at 104 °F (+40 °C)
0 % - 90 % at 68 °F (+20 °C)

18 Disposal

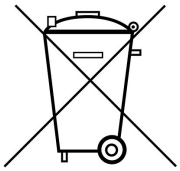

- Dispose of the stud welding unit only via the manufacturer or a specialist disposal company.
- Never dispose of the stud welding unit in the domestic refuse.

©HBS Bolzenschweiss-Systeme GmbH & Co. KG
All rights reserved – Reprinting, in whole or in part, only with the approval of the manufacturer

Service & Support

With the return please attach a copy of the filled out form together with the repair number given by HBS! Repairs without repair number will not be processed.

Repair number
(given by HBS)

_____

Company: _____
Name / Surname: _____
Street: _____
City, State and ZIP/Postcode: _____
Country: _____
Phone & Fax: _____
E-mail address: _____

Stud welding unit / stud welding gun type of model: _____
Serial number: _____
Date of purchase: _____
Purchased at distributor: _____

Detailed descriptions of errors: _____

Service & Support may be done up to the value of EUR _____ without quotation: ☐ Yes ☐ No

Could you find any damage / burn marks

on the cables: ☐ Yes ☐ No

on chucks: ☐ Yes ☐ No

Are all plug and screw connections tightly fastened *: ☐ Yes ☐ No

Are there any burn marks on plug or screw connections: ☐ Yes ☐ No

Is there any other visual damage (e.g. cracks, dents): ☐ Yes ☐ No

Have you checked the fuses: ☐ Yes ☐ No

Default on the display of the stud welding unit:

ARC / IT					CD / CDM / SC					
○	⊗				●		⊗			**

Which LED´s are illuminated (please mark with a cross)?

Please e-mail or fax this form to service@hbs-info.de or fax: +49 8131 511-100.
In case a repair is necessary a repair number will be given!

* See also operating manual chapter „Connection“
** Doesn´t light when using a contact welding gun

All rights reserved – Reprinting, in whole or in part, only with the approval of the manufacturer

Index

A

accessories 13
airborne particulates 7, 27
air connectors 35
arrow keys 19
automatic mode 34
automatic welding head 12

B

bang 8, 50
basic configuration 13
batch 51
bending device with inserts 53
bending test 53
blowing effect 56

C

capacitor 12
charging supervision 41
checking the quality 52
cleaning 60
clothing, non-flammable 8
compressed air connection 34
contact 41
control cable 31
control panel and display 19
control unit 17

D

damage to the plug connectors 31
danger from incorrect use 6
determination of welding time 43
display 19
disposal 62
drawn-arc stud welding, variants 23

E

ear protection 10
electrical hazards 10
electric arc 12
electromagnetic fields 10
EMF directive, safety notices 9
external contact inquiry 41

F

fire extinguisher 8, 49
fire extinguisher, approved 27
fire hazard 8
form „Service & Support“ 58, 63
full-ear hearing protection 8
fully automatic stud feeder 32
fumes, harmful to health 7, 27
fuse 37

G

gas pre-flow time, adjusting 46
glossary 12
goggles with visor 8
ground cable 36
ground clamps 36

H

hazards for the machine 10
hazards for the operator 10
heart pacemaker 7, 10, 42
helmet 8

I

intended use 15, 29

L

LED Display 20
liquids, inflammable 27

M

main assemblies 17
mains power supply 37
mains switch 42
mains voltage 37
maintenance and care 60
maintenance and care, regular 60
materials, inflammable 27
minimum flow rate 33, 45

O

operating manual 13

P

protective apron 8
protective equipment 8
protective equipment, personal 10
protective gloves 8

R

rectifier 12, 17
risk of burns 49
risk of falling 27

©HBS Bolzenschweiss-Systeme GmbH & Co. KG

All rights reserved – Reprinting, in whole or in part, only with the approval of the manufacturer

risk of fire 49
risk of tripping 27

S

safety goggles 10
safety goggles with sight glass 8
safety precautions 6
scope of supply 13
shutting down 59
solid-state-relais 17
spacer 50
stand-by display. 19
storage. 62
storage temperature 62
stud feeder. 12
stud feeding time, adjusting. 47
stud welding gun 12
stud welding system 12
stud welding unit 12
substances, explosive 27
surface of base material 54
surface of welding element 54
switch on the stud welding unit 42
symbols used. 10

T

technical data 14
test welding 43
transformer 17
troubleshooting 57
type plate. 18, 37

V

vessels, welding work on. 49
visual inspection 52

W

warranty entitlement 16
welding current cable. 31
welding element. 12, 15
welding gun attachment. 50
welding parameters 12, 29
welding process. 21
welding time. 19, 44
welding time, adjusting 46
workpiece 12

All rights reserved – Reprinting, in whole or in part, only with the approval of the manufacturer

©HBS Bolzenschweiss-Systeme GmbH & Co. KG
All rights reserved – Reprinting, in whole or in part, only with the approval of the manufacturer

HBS Bolzenschweiss-Systeme GmbH & Co. KG
Felix-Wankel-Strasse 18 • 85221 DACHAU • GERMANY
Phone +49 8131 511-0 • Fax +49 8131 511-100 • E-mail international@hbs-info.com

www.hbs-info.com